For Reference

TEST DATA OF FETA3000BC-250

Regulated DC Power Supply
April 26, 2023

Approved by : Takashi Yamamine
Design Manager

Prepared by : Yasushi Fukumura
Design Engineer

COSEL CO.,LTD.

COSEL

CONTENTS

1.Input Current (by Load Current) ・・・・・・・・・・・・・・・・・・・・・・・・ 1
2.Efficiency (by Load Current) ・・・・・・・・・・・・・・・・・・・・・・・・ 2
3.Power Factor (by Load Current) ・・・・・・・・・・・・・・・・・・・・・・・・ 3
4.Inrush Current ・・・・・・・・・・・・・・・・・・・・・・・・・・・・・・・・ 4
5.Leakage Current ・・・・・・・・・・・・・・・・・・・・・・・・・・・・・・・・ 5
6.Line Regulation ・・・・・・・・・・・・・・・・・・・・・・・・・・・・・・・・ 6
7.Load Regulation ・・・・・・・・・・・・・・・・・・・・・・・・・・・・・・・・ 7
8.Ripple-Noise ・・・・・・・・・・・・・・・・・・・・・・・・・・・・・・・・・ 7
9.Dynamic Load Response ・・・・・・・・・・・・・・・・・・・・・・・・・・・・ 8
10.Rise and Fall Time ・・・・・・・・・・・・・・・・・・・・・・・・・・・・・ 9
11.Hold-Up Time ・・・・・・・・・・・・・・・・・・・・・・・・・・・・・・・・ 10
12.Instantaneous Interruption Compensation ・・・・・・・・・・・・・・・・・・ 11
13.Overcurrent Protection ・・・・・・・・・・・・・・・・・・・・・・・・・・・ 12
14.Ambient Temperature Drift ・・・・・・・・・・・・・・・・・・・・・・・・・ 13
15.Minimum Input Voltage for Regulated Output Voltage ・・・・・・・・・・ 13
16.Overvoltage Protection ・・・・・・・・・・・・・・・・・・・・・・・・・・・ 13
17.Figure of Testing Circuitry ・・・・・・・・・・・・・・・・・・・・・・・・・ 14
(Final Page 15)

COSEL

Model	FETA3000BC-250
Item	Input Current (by Load Current)
Object	————————

Ambient Temperature 25°C
Testing Circuitry Figure A

1.Graph

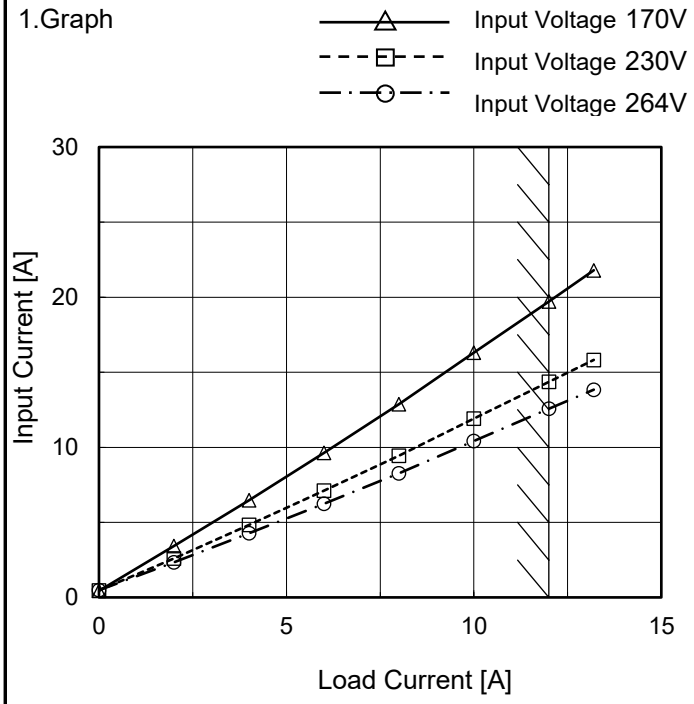

Note: Hatched line shows the range of the rated load current.

2.Values

Load Current [A]	Input Current [A]		
	Input Voltage 170[V]	Input Voltage 230[V]	Input Voltage 264[V]
0.0	0.44	0.47	0.48
2.0	3.42	2.61	2.34
4.0	6.47	4.84	4.27
6.0	9.64	7.11	6.24
8.0	12.88	9.45	8.26
10.0	16.30	11.91	10.42
12.0	19.71	14.36	12.57
13.2	21.79	15.81	13.84
-	-	-	-
-	-	-	-
-	-	-	-

BC-11927

COSEL

Model	FETA3000BC-250
Item	Efficiency (by Load Current)
Object	————————

Ambient Temperature 25°C
Testing Circuitry Figure A

1.Graph

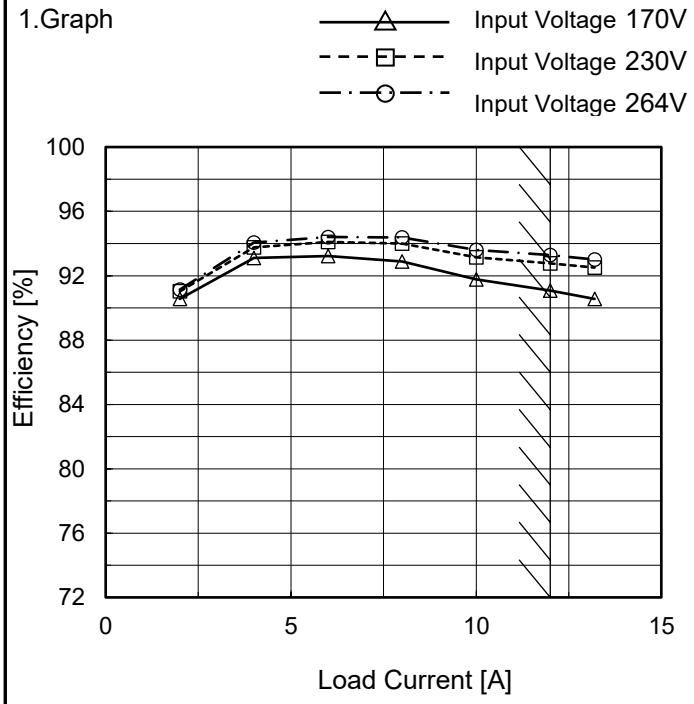

Note: Hatched line shows the range of the rated load current.

2.Values

Load Current [A]	Efficiency [%]		
	Input Voltage 170[V]	Input Voltage 230[V]	Input Voltage 264[V]
0.0	-	-	-
2.0	90.6	91.0	91.1
4.0	93.1	93.8	94.1
6.0	93.2	94.1	94.4
8.0	92.9	94.0	94.4
10.0	91.8	93.2	93.6
12.0	91.1	92.8	93.3
13.2	90.6	92.5	93.0
-	-	-	-
-	-	-	-
-	-	-	-

COSEL

Model	FETA3000BC-250
Item	Power Factor (by Load Current)
Object	————————

Ambient Temperature 25°C
Testing Circuitry Figure A

1.Graph

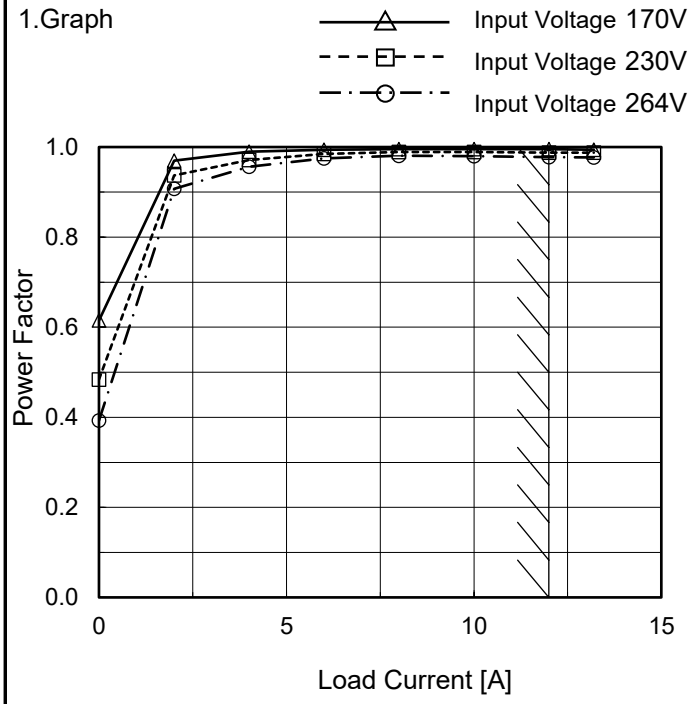

Note: Hatched line shows the range of the rated load current.

2.Values

Load Current [A]	Power Factor		
	Input Voltage 170[V]	Input Voltage 230[V]	Input Voltage 264[V]
0.0	0.615	0.484	0.393
2.0	0.970	0.937	0.908
4.0	0.990	0.971	0.956
6.0	0.994	0.985	0.975
8.0	0.995	0.989	0.981
10.0	0.995	0.989	0.980
12.0	0.995	0.988	0.978
13.2	0.994	0.988	0.977
-	-	-	-
-	-	-	-
-	-	-	-

BC-11927

COSEL

Model	FETA3000BC-250	Temperature 25°C
Item	Inrush Current	Testing Circuitry Figure A
Object	————————	

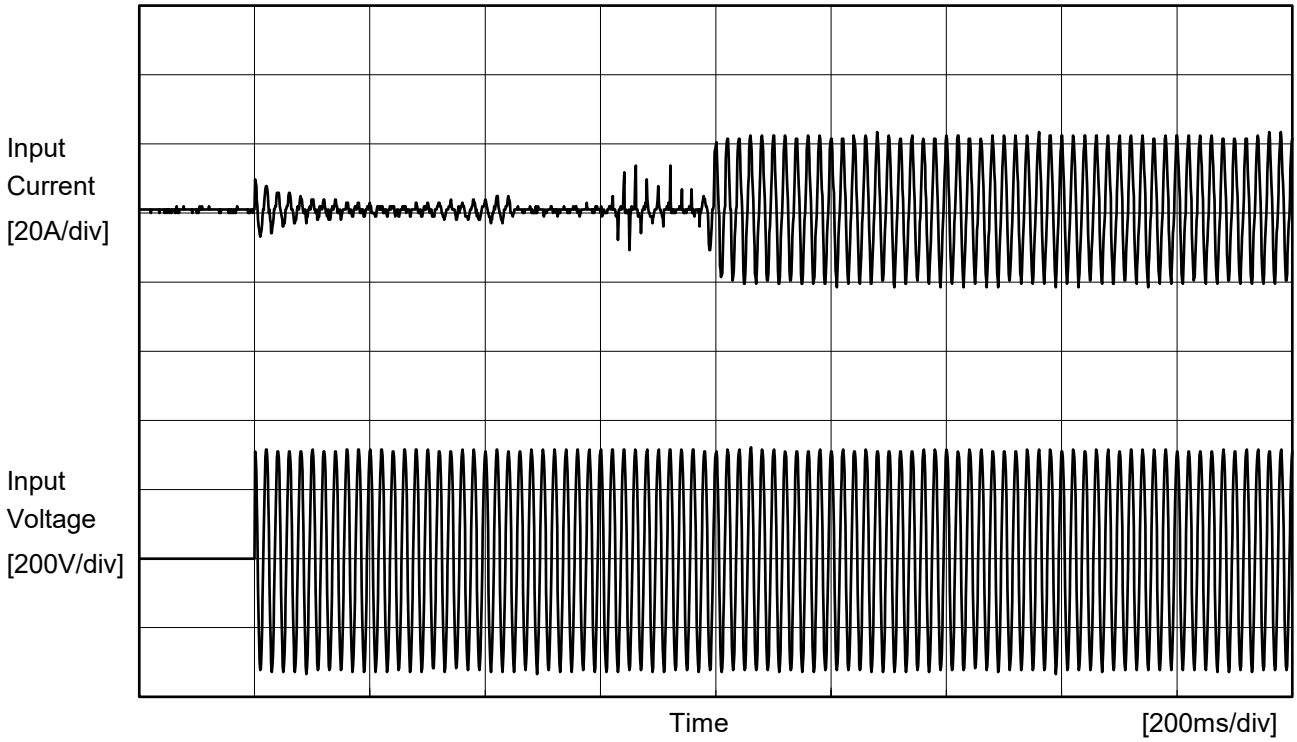

Input Voltage	230 V
Frequency	50 Hz
Load	100 %
Primary inrush current	9.6 A
Secondary inrush current	23.3 A

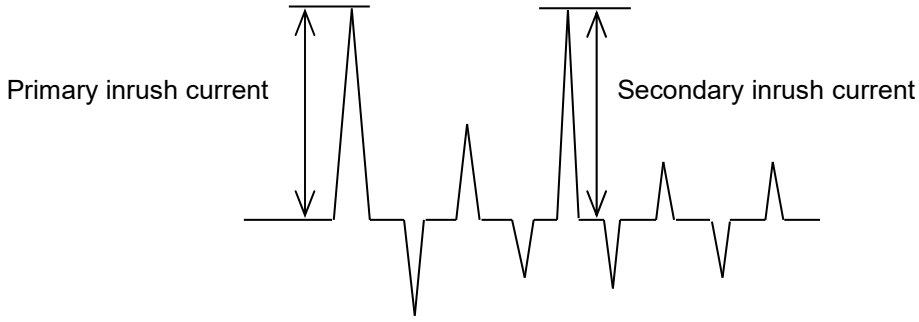

COSEL

Model	FETA3000BC-250	
Item	Leakage Current	Temperature 25°C Testing Circuitry Figure B
Object	――――――――――――	

1.Results

[mA]

Standards	Testing Circuitry	Measuring Method	Input Volt.			Note
			170 [V]	230 [V]	264 [V]	
IEC62368-1	Figure B-1	Both phases	0.48	0.65	0.75	Operation
		One of phases	0.80	1.10	1.30	Stand by
	Figure B-2	Both phases	0.46	0.64	0.74	Operation
		One of phases	0.80	1.10	1.30	Stand by

The value for "One of phases" is the reference value only.

2.Condition

Leakage current value is concluded after measuring both phases of AC input and by choosing the larger one.

COSEL

Model	FETA3000BC-250
Item	Line Regulation
Object	+250V12A

Ambient Temperature 25°C
Testing Circuitry Figure A

1.Graph

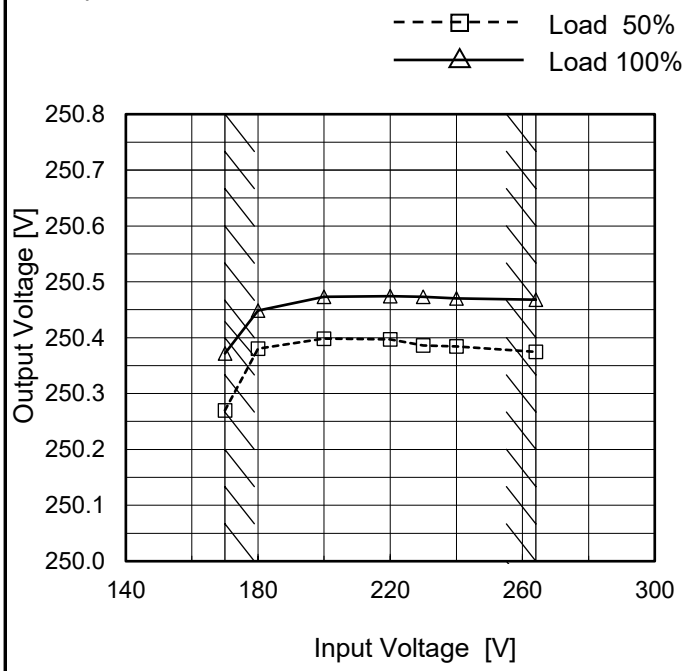

Note: Hatched line shows the range of the rated input voltage.

2.Values

Input Voltage [V]	Output Voltage [V]	
	Load 50%	Load 100%
170	250.27	250.37
180	250.38	250.45
200	250.40	250.47
220	250.40	250.47
230	250.39	250.47
240	250.38	250.47
264	250.37	250.47
-	-	-
-	-	-

COSEL

Model	FETA3000BC-250
Item	Load Regulation
Object	+250V12A

Ambient Temperature 25°C
Testing Circuitry Figure A

1.Graph

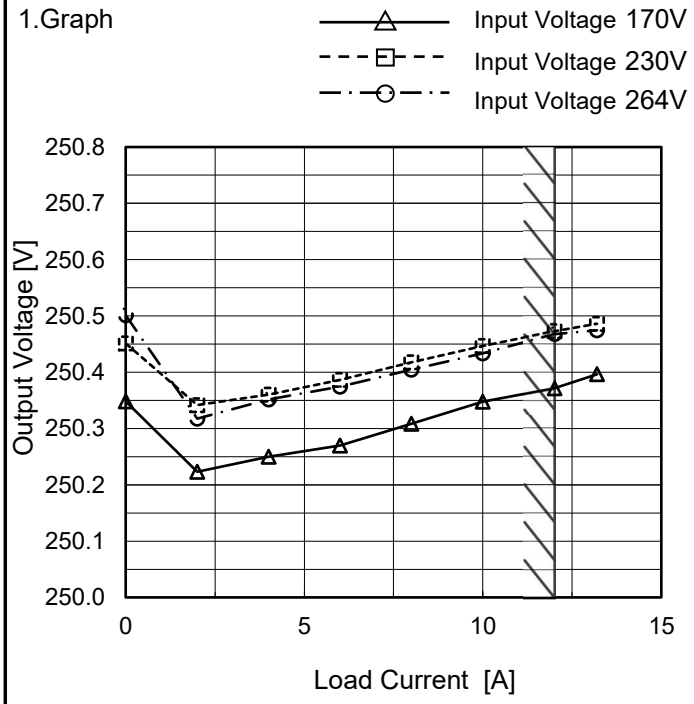

Note: Hatched line shows the range of the rated load current.

2.Values

Load Current [A]	Output Voltage [V] Input Voltage 170[V]	Input Voltage 230[V]	Input Voltage 264[V]
0.0	250.35	250.45	250.50
2.0	250.22	250.34	250.32
4.0	250.25	250.36	250.35
6.0	250.27	250.39	250.37
8.0	250.31	250.42	250.40
10.0	250.35	250.45	250.43
12.0	250.37	250.47	250.47
13.2	250.40	250.49	250.47
-	-	-	-
-	-	-	-
-	-	-	-

Item	Ripple-Noise
Object	+250V12A

Ambient Temperature 25°C
Testing Circuitry Figure C

1.Graph

Input Voltage 230V
Load 100%

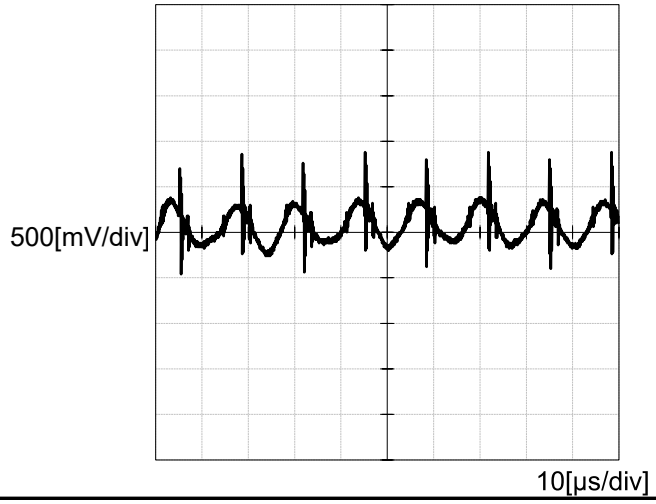

COSEL

Model	FETA3000BC-250
Item	Dynamic Load Response
Object	+250V12A

Ambient Temperature 25°C
Testing Circuitry Figure A

Input Voltage 230 V
Cycle 1000 ms

Response. t1=t2=50µs. Typ

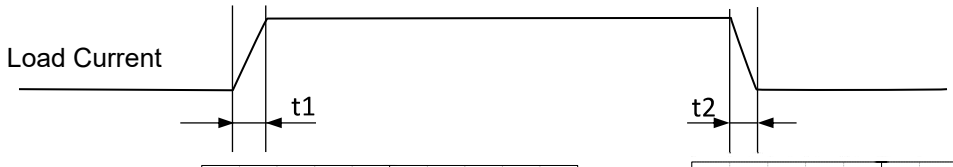

Load 0% ⟷
Load 100%

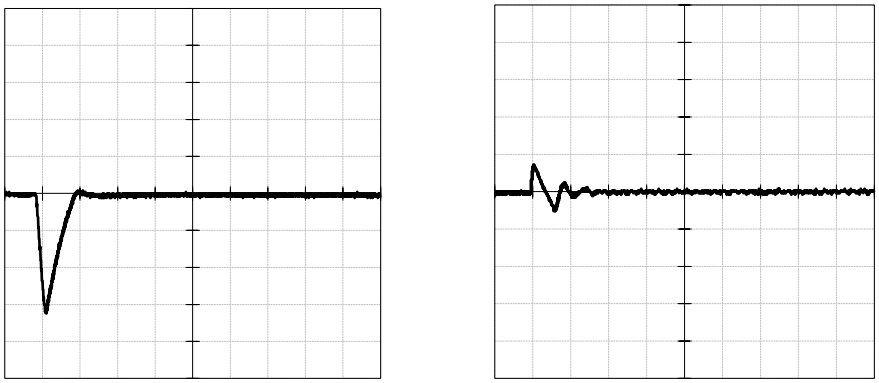

20[V/div]

0.4[ms/div] 4[ms/div]

Load 0% ⟷
Load 50%

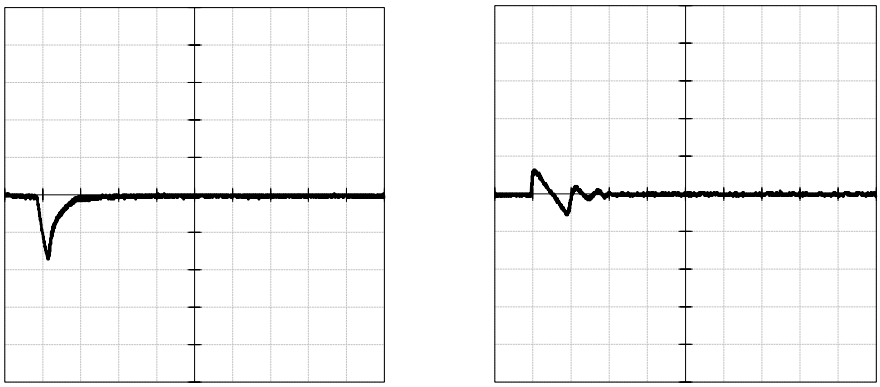

20[V/div]

0.4[ms/div] 4[ms/div]

COSEL

Model	FETA3000BC-250
Item	Rise and Fall Time
Object	+250V12A

Ambient Temperature 25°C
Testing Circuitry Figure A

1.Graph

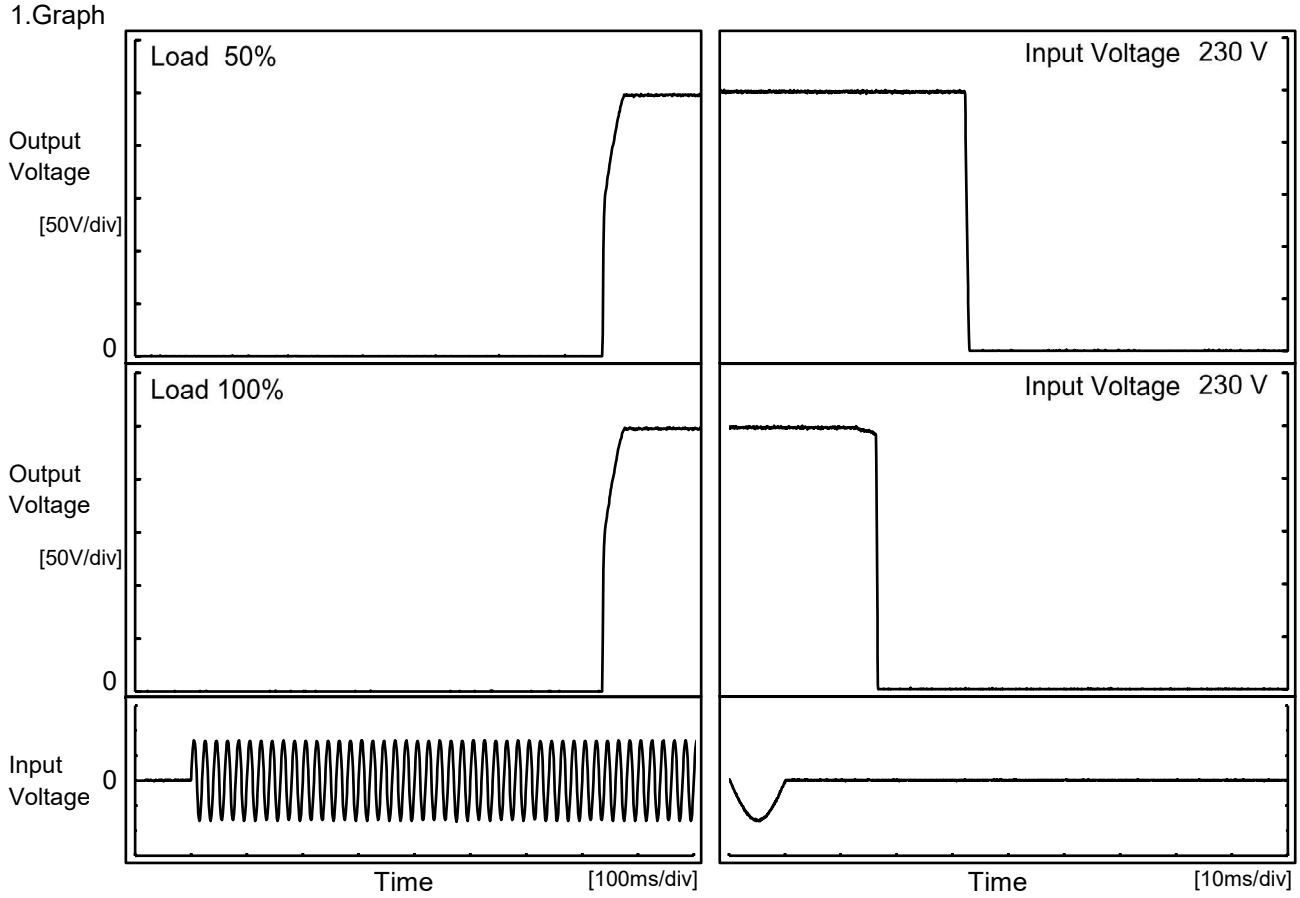

2.Values

[ms]

Load \ Time	Td	Tr	Ts	Th	Tf
50%	726.0	27.0	753.0	33.3	0.7
100%	725.0	28.0	753.0	12.4	0.4

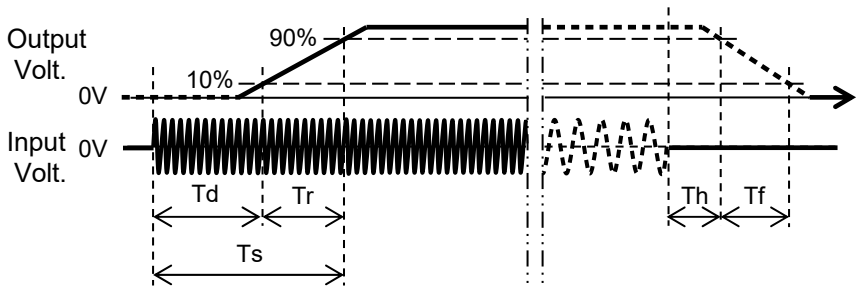

BC-11927

COSEL

Model	FETA3000BC-250
Item	Hold-Up Time
Object	+250V12A

Ambient Temperature 25°C
Testing Circuitry Figure A

1.Graph

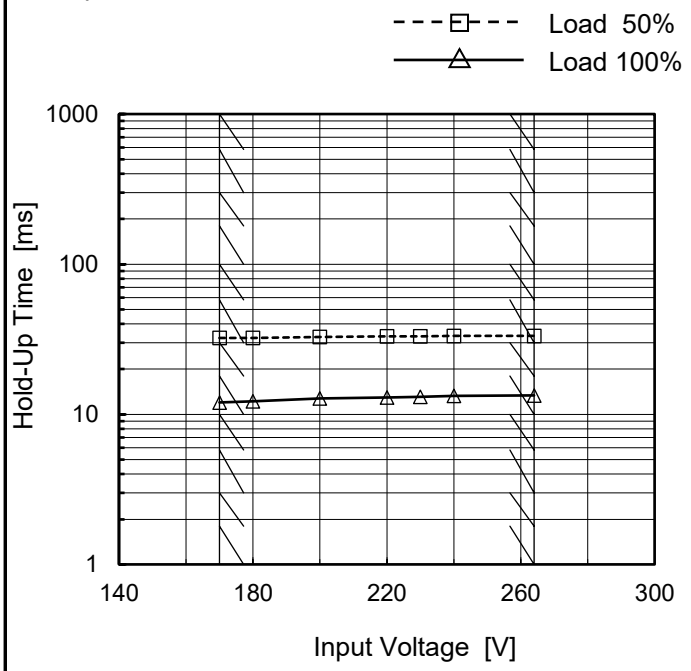

This duration covers from Shut-off of input voltage to the moment when output voltage drops to the rated voltage accuracy.

Note: Hatched line shows the range of the rated input voltage.

2.Values

Input Voltage [V]	Hold-Up Time [ms]	
	Load 50%	Load 100%
170	32.2	12.0
180	32.3	12.2
200	32.7	12.8
220	33.0	13.0
230	33.1	13.1
240	33.3	13.3
264	33.3	13.4
-	-	-
-	-	-

COSEL

Model	FETA3000TF-250
Item	Instantaneous Interruption Compensation
Object	+250V12A

Ambient Temperature 25°C
Testing Circuitry Figure A

1.Graph

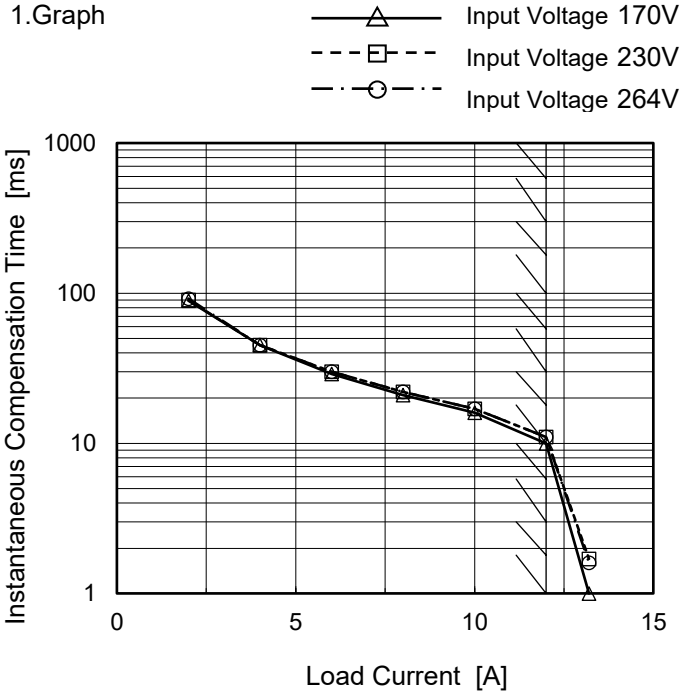

Note: Hatched line shows the range of the rated input voltage.

2.Values

Load Current [A]	Time [ms]		
	Input Voltage 170[V]	Input Voltage 230[V]	Input Voltage 264[V]
0.0	-	-	-
2.0	89	90	92
4.0	45	45	45
6.0	29	30	30
8.0	21	22	22
10.0	16	17	17
12.0	10	11	11
13.2	1.0	1.7	1.6
-	-	-	-
-	-	-	-
-	-	-	-

BC-11927

COSEL

Model	FETA3000BC-250
Item	Overcurrent Protection
Object	+250V12A

Ambient Temperature 25°C
Testing Circuitry Figure A

1.Graph

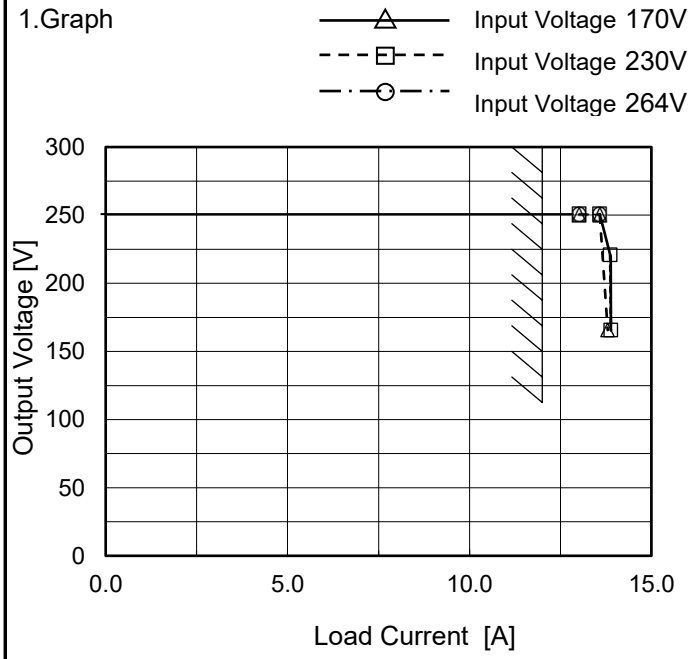

Note: Hatched line shows the range of the rated load current.

2.Values

Output Voltage [V]	Load Current [A]		
	Input Voltage 170[V]	Input Voltage 230[V]	Input Voltage 264[V]
250	13.58	13.58	13.58
241	13.74	13.77	13.78
229	13.86	13.88	13.90
165	13.80	13.89	13.89
-	-	-	-
-	-	-	-
-	-	-	-
-	-	-	-
-	-	-	-
-	-	-	-
-	-	-	-
-	-	-	-

COSEL

Model	FETA3000BC-250
Item	Ambient Temperature Drift
Object	+250V12A

Testing Circuitry Figure A

1.Values

Load 100%

Ambient Temperature[℃]	Output Voltage [V]		
	Input Voltage 170V	Input Voltage 230V	Input Voltage 264V
-10	249.40	249.44	249.51
25	250.30	250.33	250.37
50	250.39	250.37	250.34

Item	Minimum Input Voltage for Regulated Output Voltage
Object	+250V12A

Testing Circuitry Figure A

1.Values

Ambient Temperature[℃]	Input Voltage [V]	
	Load 50%	Load 100%
-10	167	168
25	167	168
50	167	168

Item	Overvoltage Protection
Object	+250V12A

Testing Circuitry Figure A

1.Values

Load 0%

Ambient Temperature[℃]	Operating Point [V]	
	Input Voltage 170V	Input Voltage 264V
-10	417.40	417.21
25	418.27	418.37
50	418.45	418.53

COSEL

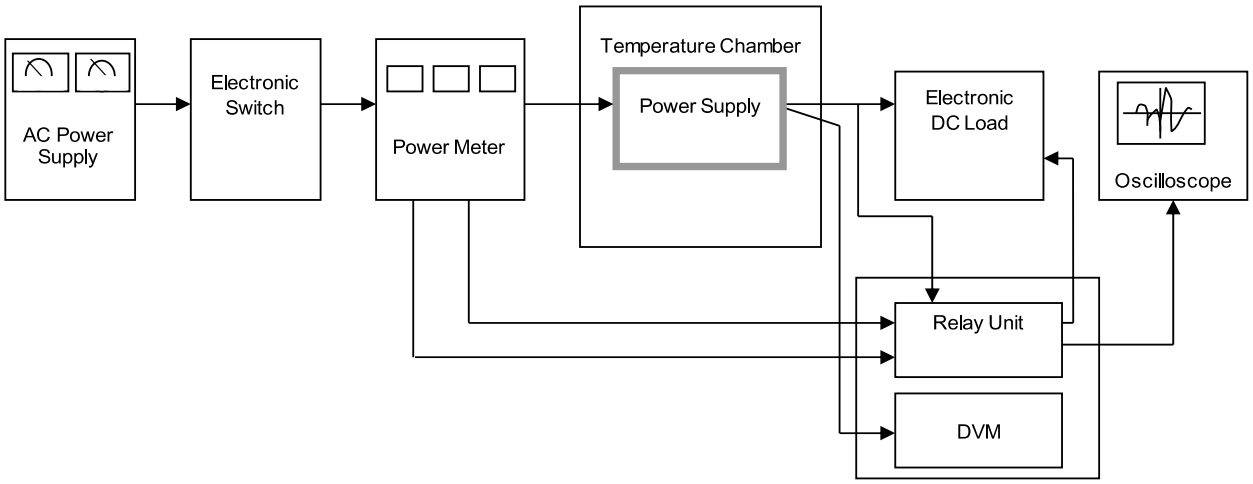

Figure A

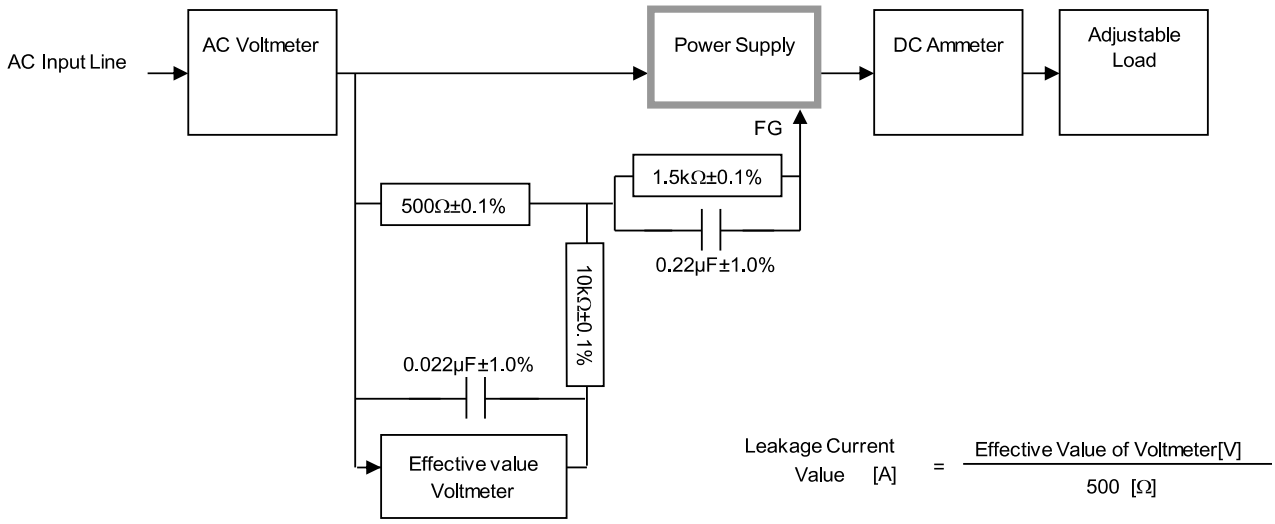

Figure B-1 (IEC62368-1 refer to IEC60990 Fig.4)

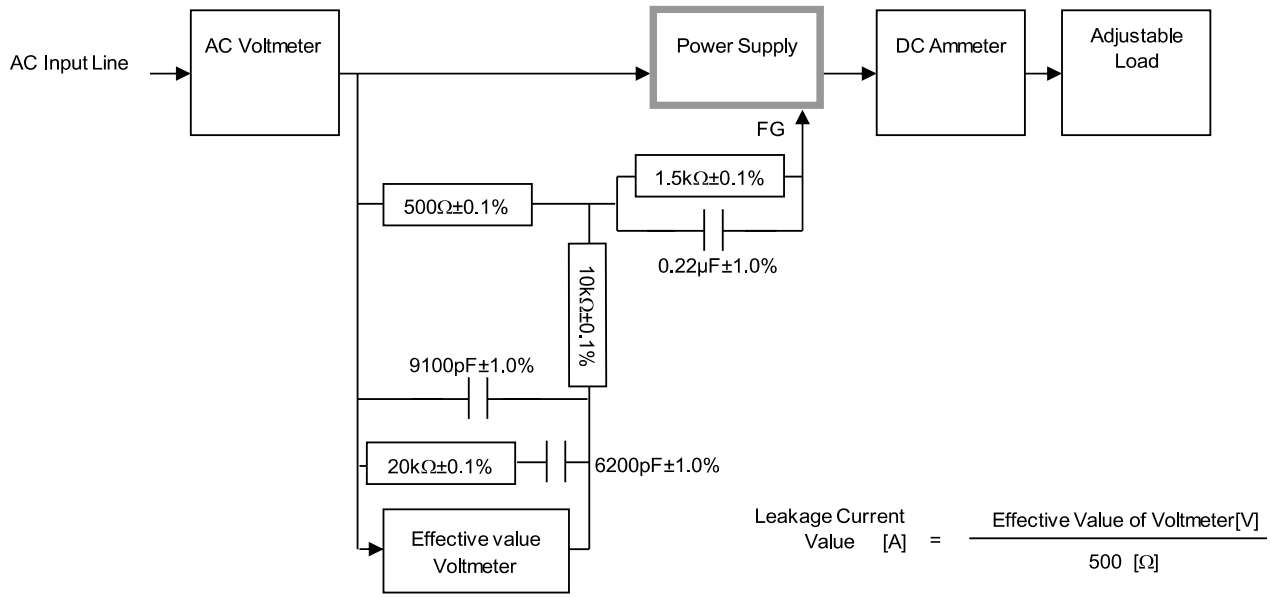

Figure B-2 (IEC62368-1 refer to IEC60990 Fig.5)

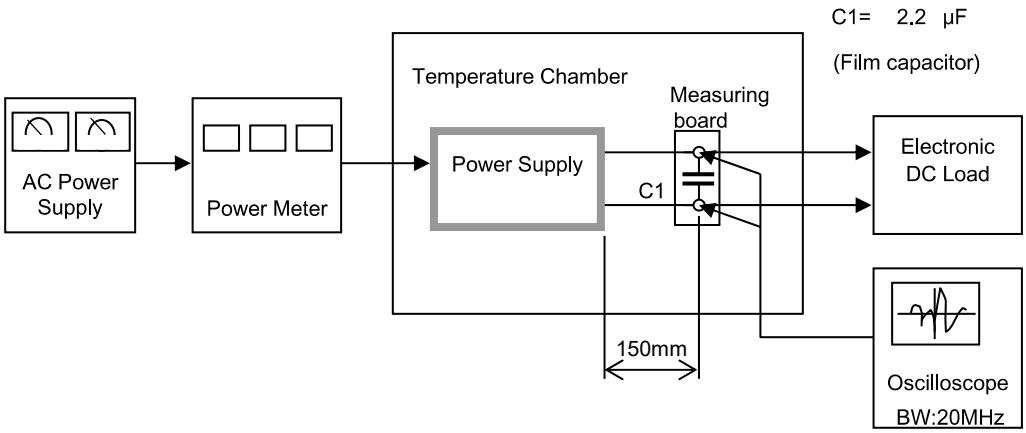
C1= 2.2 μF
(Film capacitor)
Temperature Chamber
Measuring board
AC Power Supply
Power Meter
Power Supply
C1
Electronic DC Load
150mm
Oscilloscope
BW:20MHz

Figure C