COSEL

For Reference

TEST DATA OF HCA3500TF-65

Regulated DC Power Supply

Approved by : T.Yamamine

Design Manager

Prepared by : Y.Fukumura

Design Engineer

COSEL CO.,LTD.

COSEL

CONTENTS

1.Input Current (by Load Current) · 1
2.Efficiency (by Load Current) · 2
3.Power Factor (by Load Current) · 3
4.Inrush Current · 4
5.Leakage Current · 5
6.Line Regulation · 6
7.Load Regulation · 7
8.Ripple-Noise · 7
9.Dynamic Load Response · 8
10.Rise and Fall Time · 9
11.Hold-Up Time · 10
12.Instantaneous Interruption Compensation · · · · · · · · · · · · · · · · · 11
13.Overcurrent Protection · 12
14.Ambient Temperature Drift · 13
15.Minimum Input Voltage for Regulated Output Voltage · · · · · · · · · · 13
16.Overvoltage Protection · 13
17.Figure of Testing Circuitry · 14
(Final Page 15)

COSEL

Model	HCA3500TF-65
Item	Input Current (by Load Current)
Object	————————

Ambient Temperature 25°C
Baseplate Temperature 25°C
Testing Circuitry Figure A

1.Graph

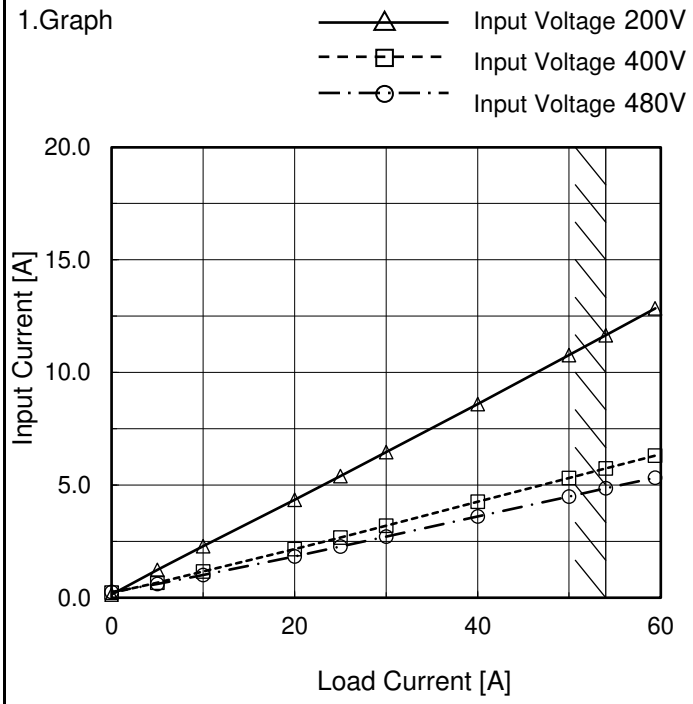

Note: Hatched line shows the range of the rated load current.

2.Values

Load Current [A]	Input Current [A]		
	Input Voltage 200[V]	Input Voltage 400[V]	Input Voltage 480[V]
0.0	0.140	0.224	0.260
5.0	1.240	0.671	0.609
10.0	2.290	1.158	1.003
20.0	4.340	2.160	1.825
25.0	5.400	2.675	2.266
30.0	6.460	3.192	2.715
40.0	8.600	4.256	3.607
50.0	10.770	5.316	4.494
54.0	11.650	5.744	4.853
59.4	12.850	6.313	5.331
-	-	-	-

BC-11922

COSEL

Model	HCA3500TF-65
Item	Efficiency (by Load Current)
Object	————————

Ambient Temperature 25°C
Baseplate Temperature 25°C
Testing Circuitry Figure A

1.Graph

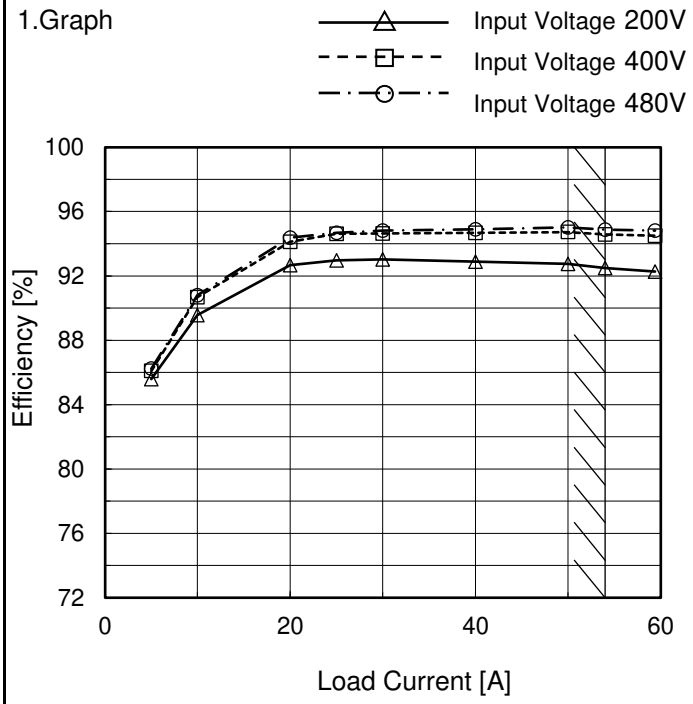

Note: Hatched line shows the range of the rated load current.

2.Values

Load Current [A]	Efficiency [%]		
	Input Voltage 200[V]	Input Voltage 400[V]	Input Voltage 480[V]
0.0	-	-	-
5.0	85.6	86.1	86.2
10.0	89.6	90.7	90.8
20.0	92.7	94.1	94.4
25.0	93.0	94.6	94.7
30.0	93.0	94.6	94.8
40.0	92.9	94.7	94.9
50.0	92.7	94.7	95.0
54.0	92.5	94.6	94.9
59.4	92.3	94.5	94.8
-	-	-	-

COSEL

Model	HCA3500TF-65
Item	Power Factor (by Load Current)
Object	————————

Ambient Temperature 25°C
Baseplate Temperature 25°C
Testing Circuitry Figure A

1.Graph

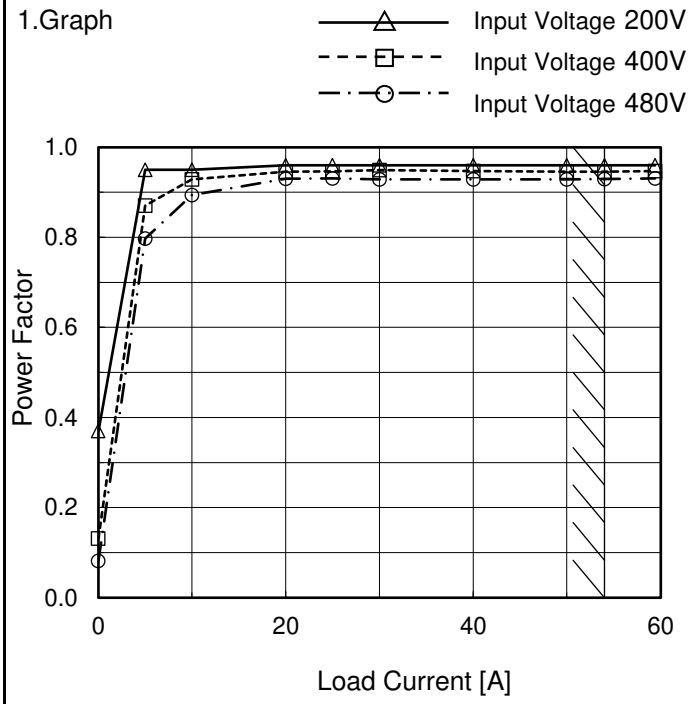

Note: Hatched line shows the range of the rated load current.

2.Values

Load Current [A]	Power Factor		
	Input Voltage 200[V]	Input Voltage 400[V]	Input Voltage 480[V]
0.0	0.370	0.132	0.082
5.0	0.950	0.871	0.797
10.0	0.950	0.929	0.894
20.0	0.960	0.946	0.930
25.0	0.960	0.947	0.931
30.0	0.960	0.949	0.929
40.0	0.960	0.947	0.928
50.0	0.960	0.945	0.928
54.0	0.960	0.946	0.929
59.4	0.960	0.947	0.931
-	-	-	-

BC-11922

COSEL

Model	HCA3500TF-65	
Item	Inrush Current	Temperature 25°C Testing Circuitry Figure A
Object	————————	

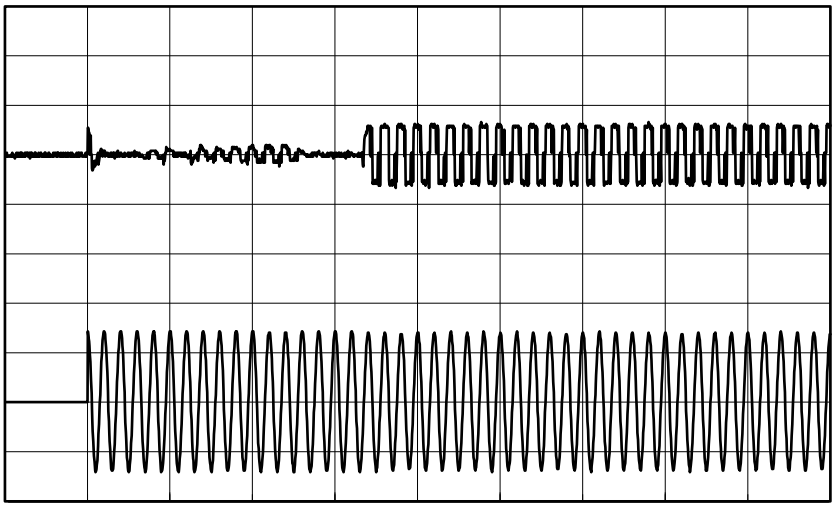

Input Voltage 200 V
Frequency 50 Hz
Load 100 %

Primary inrush current : 9.1 A
Secondary inrush current : 3.2 A

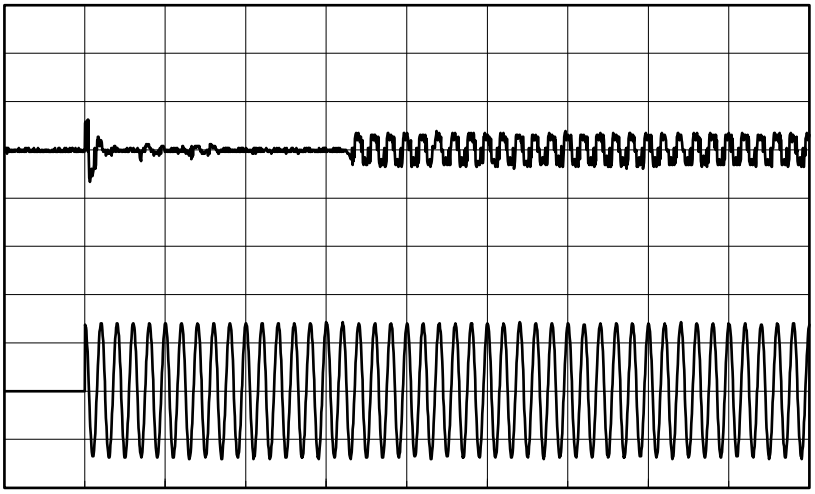

Input Voltage 400 V
Frequency 50 Hz
Load 100 %

Primary inrush current : 16.6 A
Secondary inrush current : 2.4 A

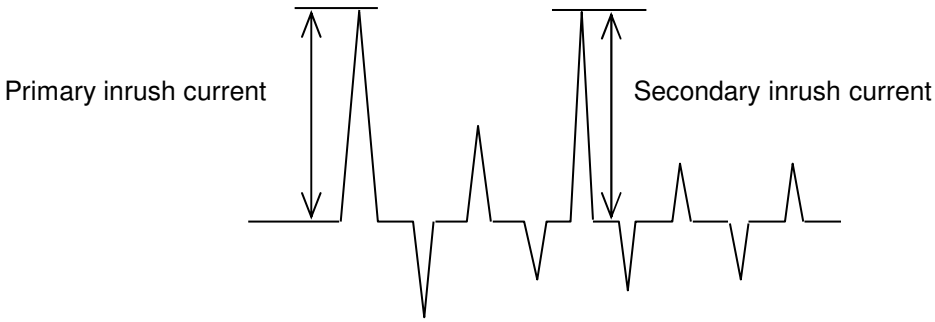

COSEL

Model	HCA3500TF-65	Ambient Temperature 25°C Baseplate Temperature 25°C Testing Circuitry Figure B
Item	Leakage Current	
Object	――――――――――――	

1.Results

[mA]

Standards	Testing Circuitry	Input Voltage			Note
		200[V]	400[V]	480[V]	
IEC62368-1	FigureB-1	0.58	1.17	1.37	
	FigureB-2	0.58	1.17	1.37	

2.Condition

Leakage current value is concluded after measuring all phases of AC input and by choosing the larger one

COSEL

Model	HCA3500TF-65
Item	Line Regulation
Object	+65V54A

Ambient Temperature 25°C
Baseplate Temperature 25°C
Testing Circuitry Figure A

1.Graph

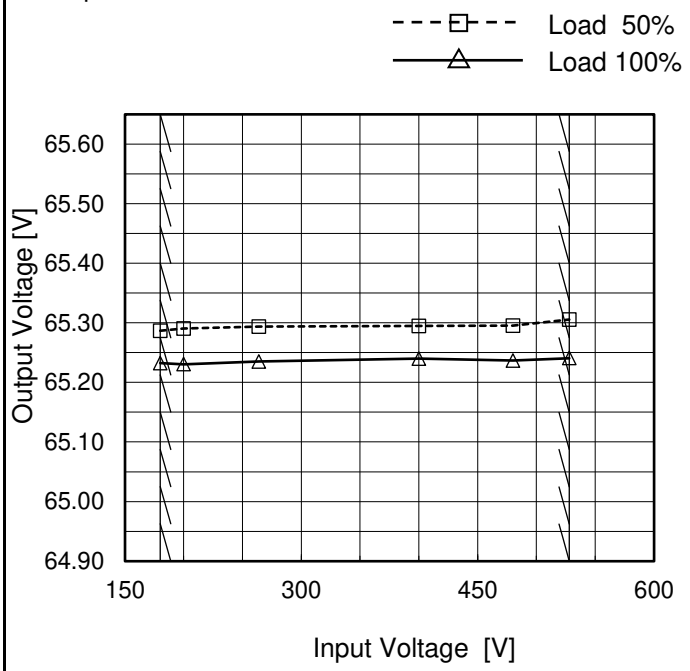

Note: Hatched line shows the range of the rated input voltage.

2.Values

Input Voltage [V]	Output Voltage [V]	
	Load 50%	Load 100%
180	65.287	65.233
200	65.291	65.231
264	65.293	65.235
400	65.295	65.240
480	65.295	65.237
528	65.305	65.241
-	-	-
-	-	-
-	-	-

BC-11922

COSEL

Model	HCA3500TF-65
Item	Load Regulation
Object	+65V54A

Ambient Temperature 25°C
Baseplate Temperature 25°C
Testing Circuitry Figure A

1.Graph

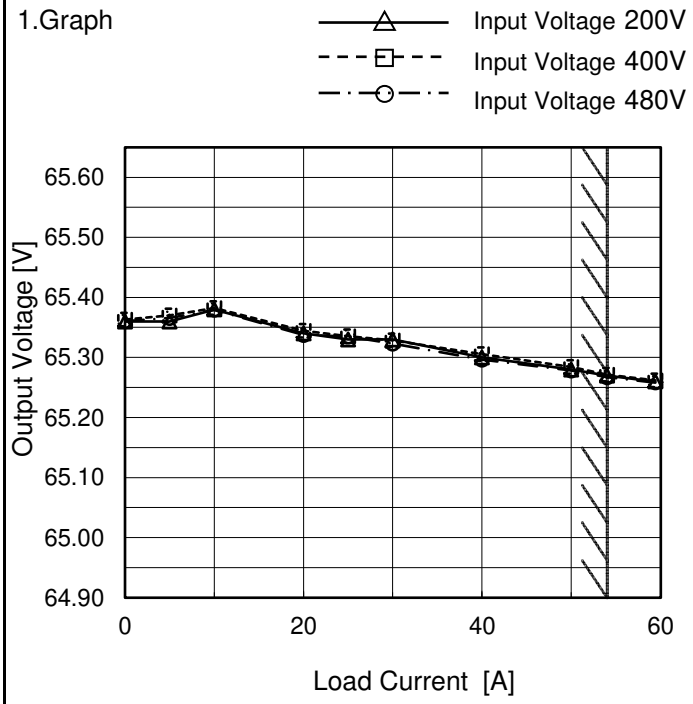

Note: Hatched line shows the range of the rated load current.

2.Values

Load Current [A]	Output Voltage [V] Input Voltage 200[V]	Input Voltage 400[V]	Input Voltage 480[V]
0.0	65.360	65.363	65.361
5.0	65.360	65.370	65.366
10.0	65.380	65.382	65.379
20.0	65.340	65.344	65.337
25.0	65.330	65.335	65.335
30.0	65.330	65.329	65.323
40.0	65.300	65.305	65.296
50.0	65.280	65.284	65.278
54.0	65.270	65.271	65.267
59.4	65.260	65.262	65.258
-	-	-	-

Item	Ripple-Noise
Object	+65V54A

Ambient Temperature 25°C
Baseplate Temperature 25°C
Testing Circuitry Figure C

1.Graph

Input Voltage 400V
Load 100%

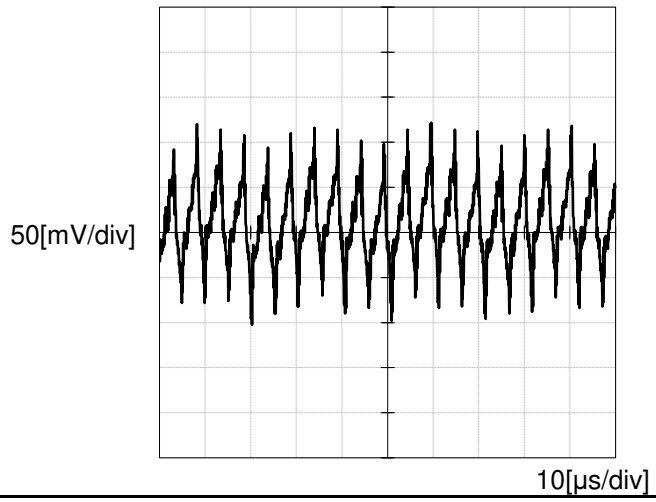

BC-11922

COSEL

Model	HCA3500TF-65	Ambient Temperature 25°C Baseplate Temperature 25°C Testing Circuitry Figure A
Item	Dynamic Load Response	
Object	+65V54A	

Input Voltage 400 V
Cycle 1000 ms

Response. t1=t2=50µs. Typ

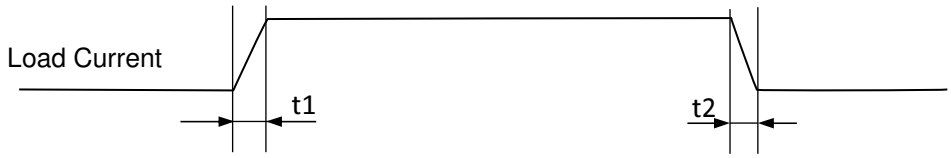

Load 0% ⟷
Load 100%

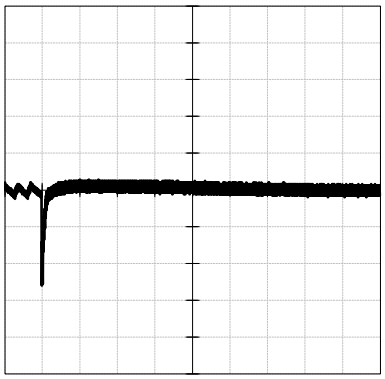

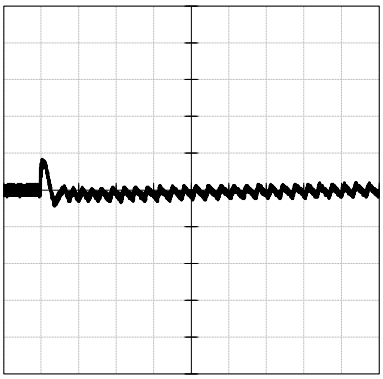

1[V/div]

10[ms/div]

10[ms/div]

Load 50% ⟷
Load 100%

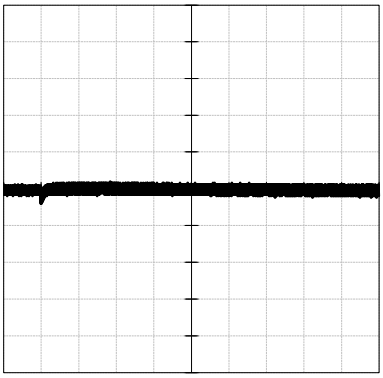

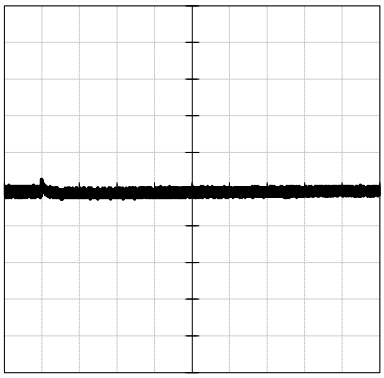

1[V/div]

10[ms/div]

10[ms/div]

COSEL

Model	HCA3500TF-65	Ambient Temperature 25°C Baseplate Temperature 25°C Testing Circuitry Figure A
Item	Rise and Fall Time	
Object	+65V54A	

1.Graph

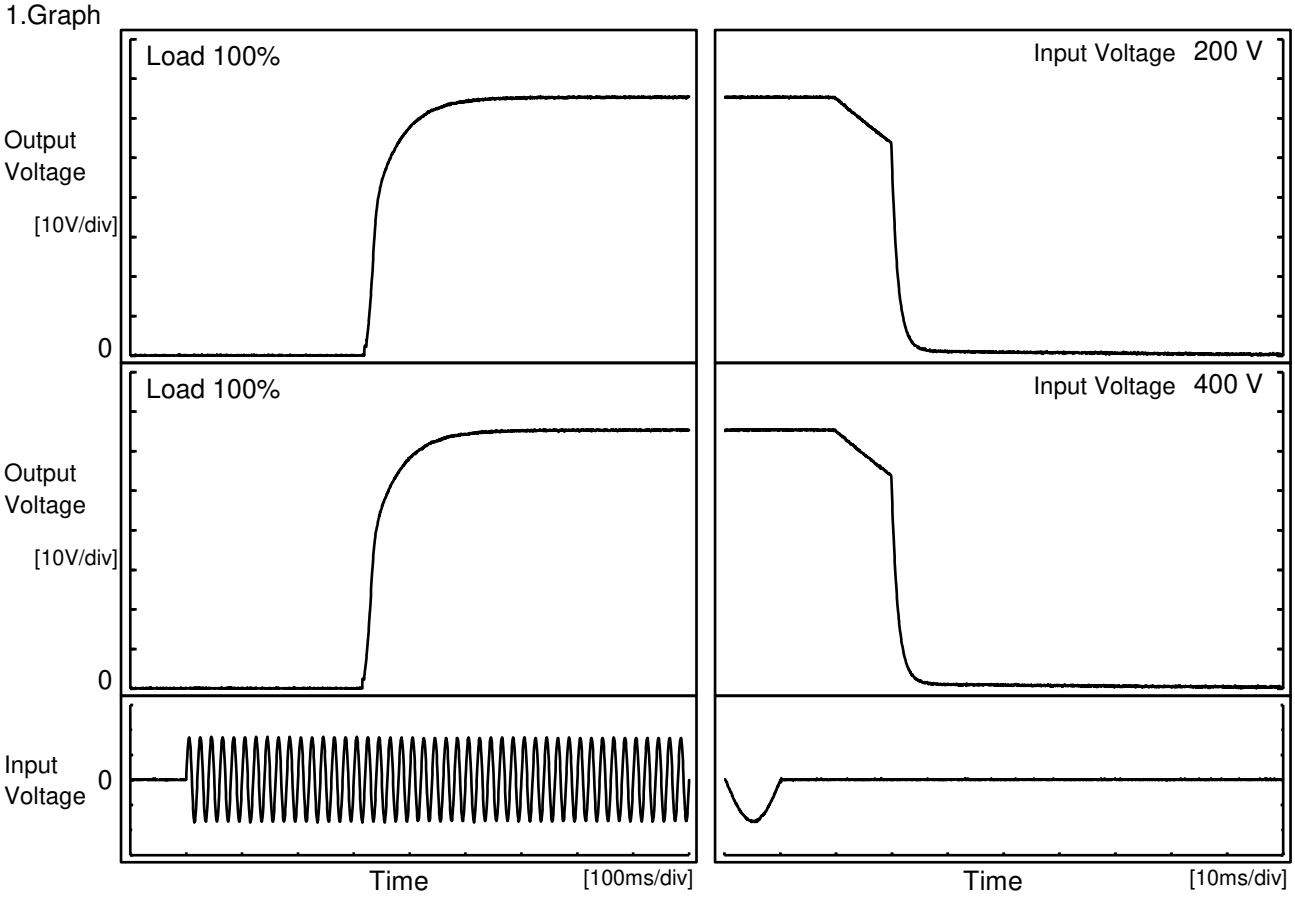

2.Values

[ms]

Input Voltage \ Time	Td	Tr	Ts	Th	Tf
200 V	325.0	80.0	405.0	15.5	7.1
400 V	321.5	81.0	402.5	15.6	7.0

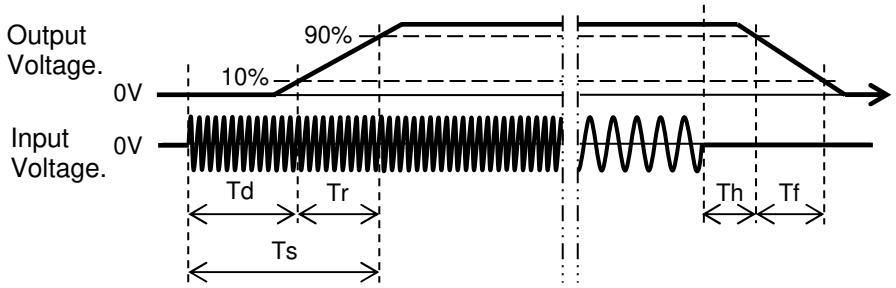

COSEL

Model	HCA3500TF-65
Item	Hold-Up Time
Object	+65V54A

Ambient Temperature 25°C
Baseplate Temperature 25°C
Testing Circuitry Figure A

1.Graph

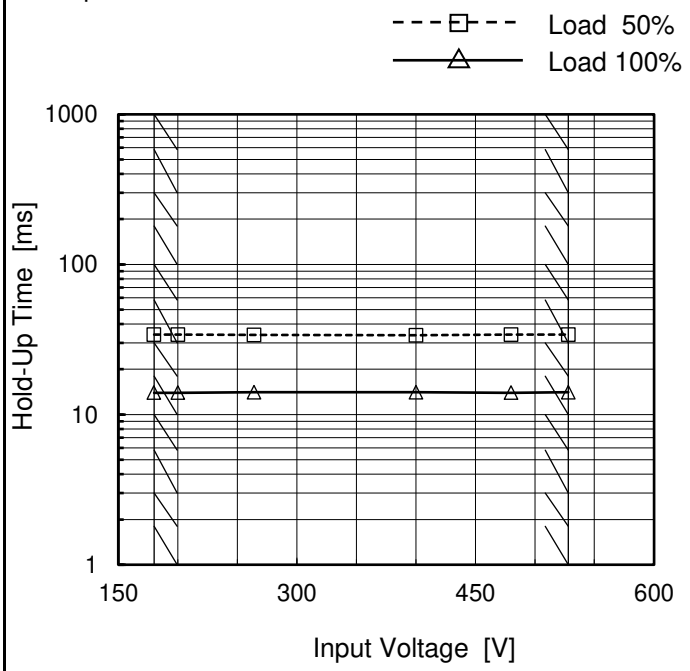

This duration covers from Shut-off of input voltage to the moment when output voltage drops to 95% of the rated voltage.

Note: Hatched line shows the range of the rated input voltage.

2.Values

Input Voltage [V]	Hold-Up Time [ms]	
	Load 50%	Load 100%
180	34	14
200	34	14
264	34	14
400	34	14
480	34	14
528	34	14
-	-	-
-	-	-
-	-	-

COSEL

Model	HCA3500TF-65
Item	Instantaneous Interruption Compensation
Object	+65V54A

Ambient Temperature 25°C
Baseplate Temperature 25°C
Testing Circuitry Figure A

1.Graph

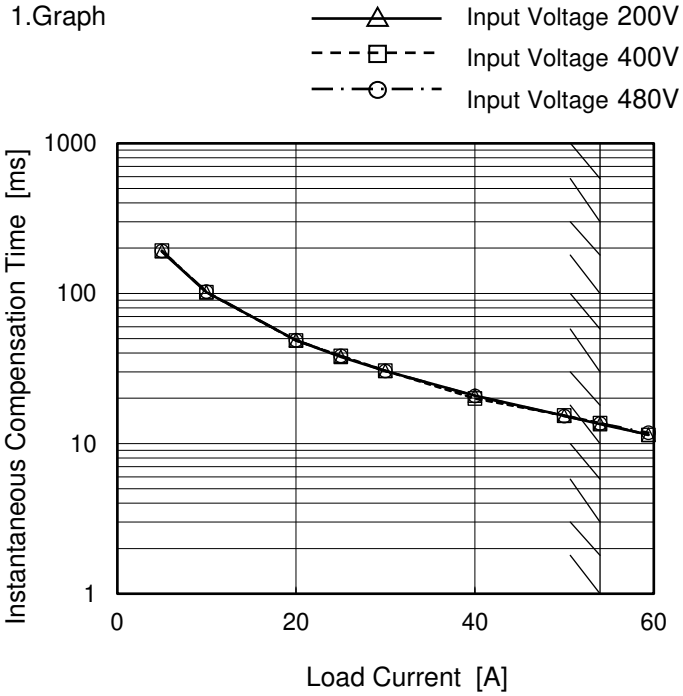

Note: Hatched line shows the range of the rated input voltage.

2.Values

Load Current [A]	Time [ms]		
	Input Voltage 200[V]	Input Voltage 400[V]	Input Voltage 480[V]
0.0	-	-	-
5.0	190	193	192
10.0	102	102	103
20.0	49	49	49
25.0	38	38	38
30.0	30	31	30
40.0	21	20	21
50.0	15	15	15
54.0	14	14	14
59.4	11	11	12
-	-	-	-

COSEL

Model	HCA3500TF-65
Item	Overcurrent Protection
Object	+65V54A

Ambient Temperature 25°C
Baseplate Temperature 25°C
Testing Circuitry Figure A

1.Graph

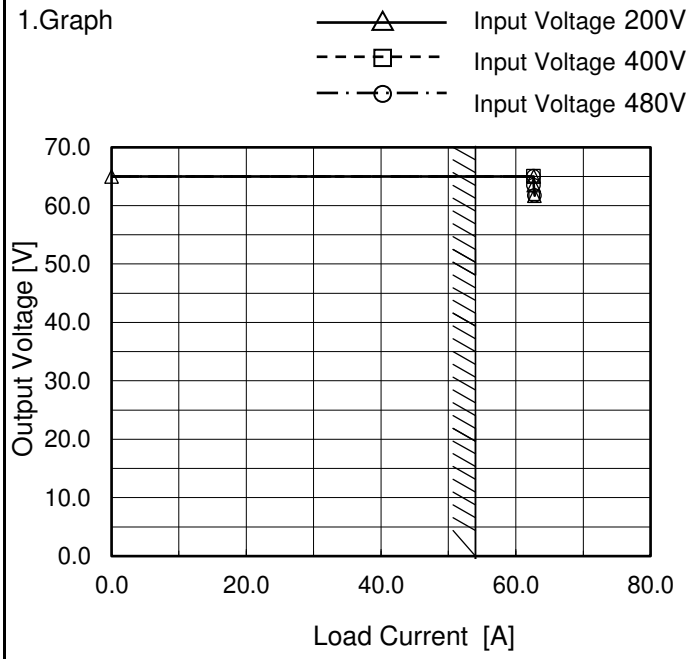

Note: Hatched line shows the range of the rated load current.

2.Values

Output Voltage [V]	Load Current [A]		
	Input Voltage 200[V]	Input Voltage 400[V]	Input Voltage 480[V]
65.0	61.80	61.80	61.80
63.5	62.64	62.66	62.63
61.7	62.76	62.70	62.73
-	-	-	-
-	-	-	-
-	-	-	-
-	-	-	-
-	-	-	-
-	-	-	-
-	-	-	-
-	-	-	-
-	-	-	-

COSEL

Model	HCA3500TF-65
Item	Ambient Temperature Drift
Object	+65V54A

Testing Circuitry Figure A

1.Values

Load 100%

Temperature[°C]		Output Voltage [V]		
Ambient	Baseplate	Input Voltage 200V	Input Voltage 400V	Input Voltage 480V
-10	0	65.085	65.108	65.106
25	25	65.225	65.228	65.229
70	55	65.261	65.265	65.265

Item	Minimum Input Voltage for Regulated Output Voltage
Object	+65V54A

Testing Circuitry Figure A

1.Values

Temperature[°C]		Input Voltage [V]	
Ambient	Baseplate	Load 50%	Load 100%
-10	0	171	170
25	25	171	171
70	55	172	172

Item	Overvoltage Protection
Object	+65V54A

Testing Circuitry Figure A

1.Values

Load 0%

Temperature[°C]		Operating Point [V]	
Ambient	Baseplate	Input Voltage 200V	Input Voltage 400V
-10	0	81.67	81.66
25	25	81.99	81.98
70	55	82.24	82.13

COSEL

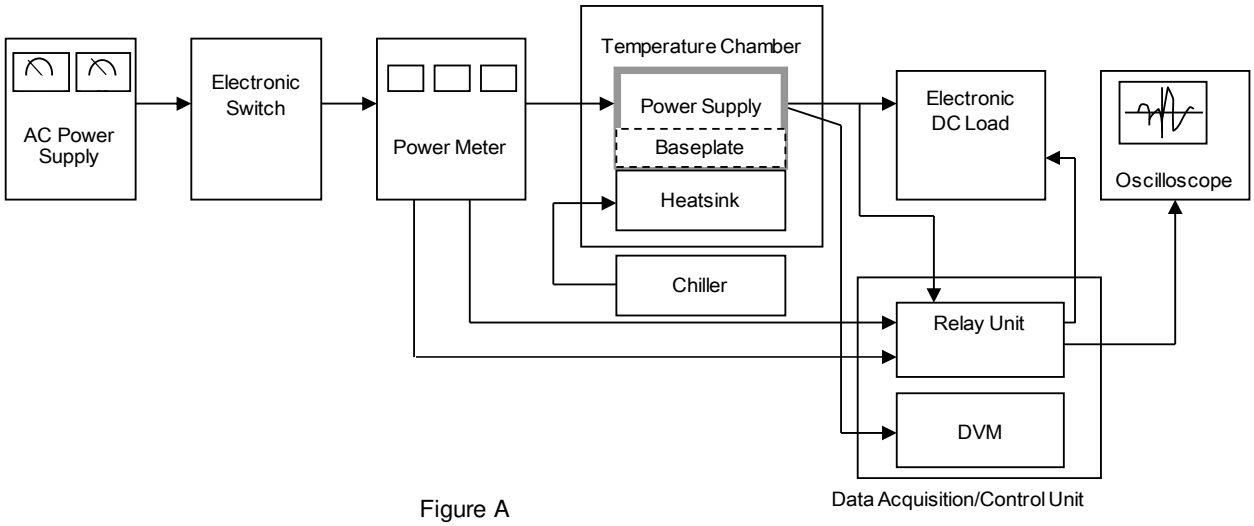

Figure A

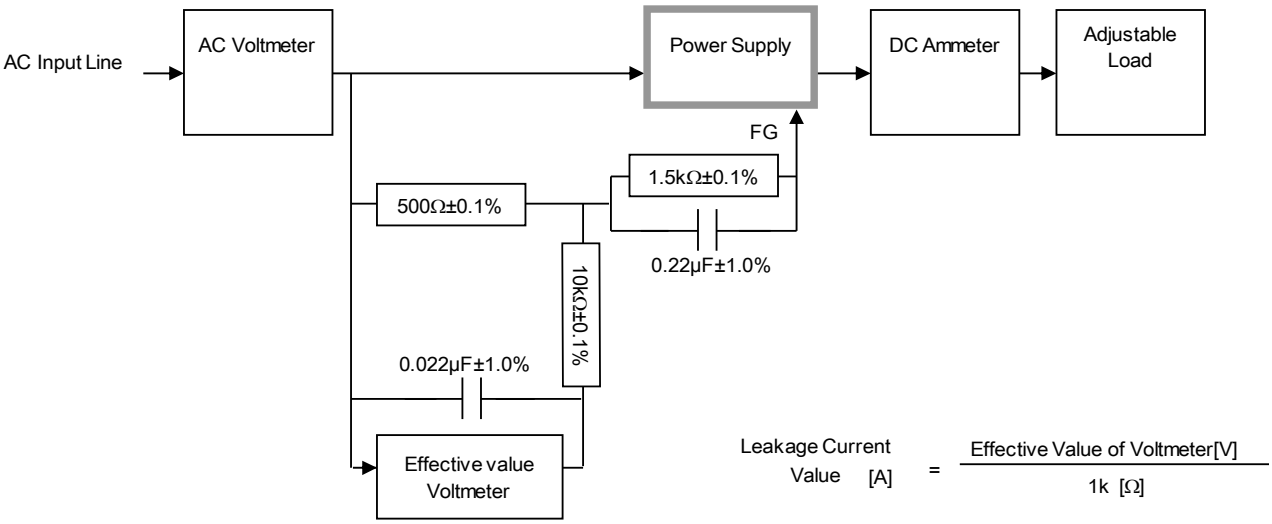

Figure B-1 (IEC62368-1)

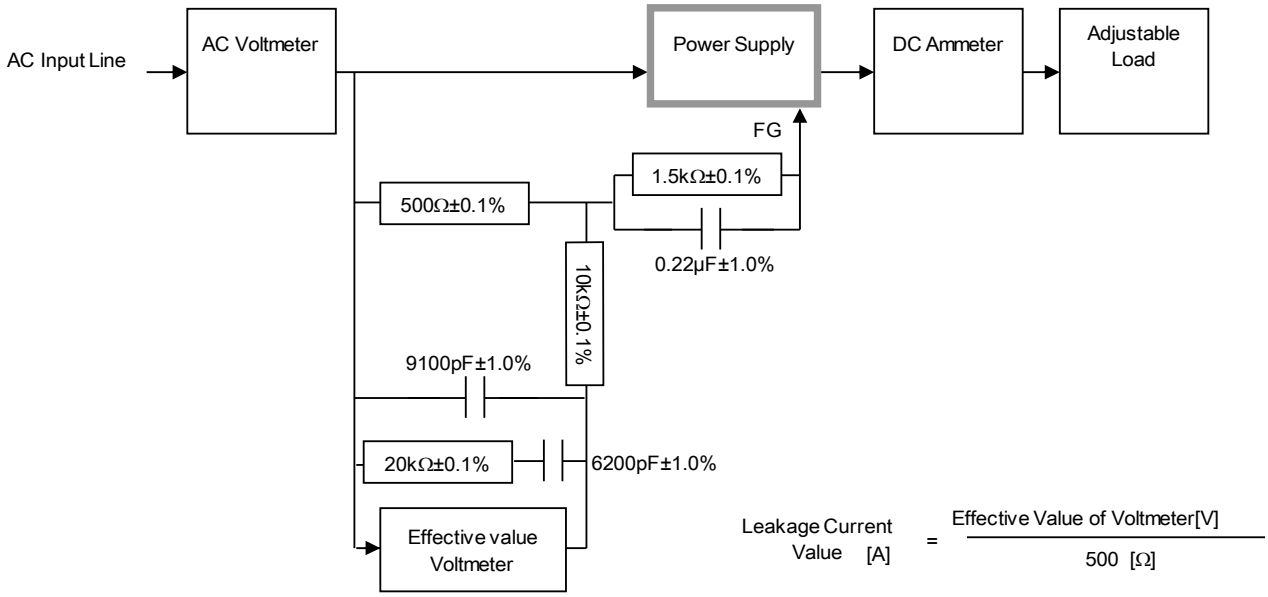

Figure B-2 (IEC62368-1)

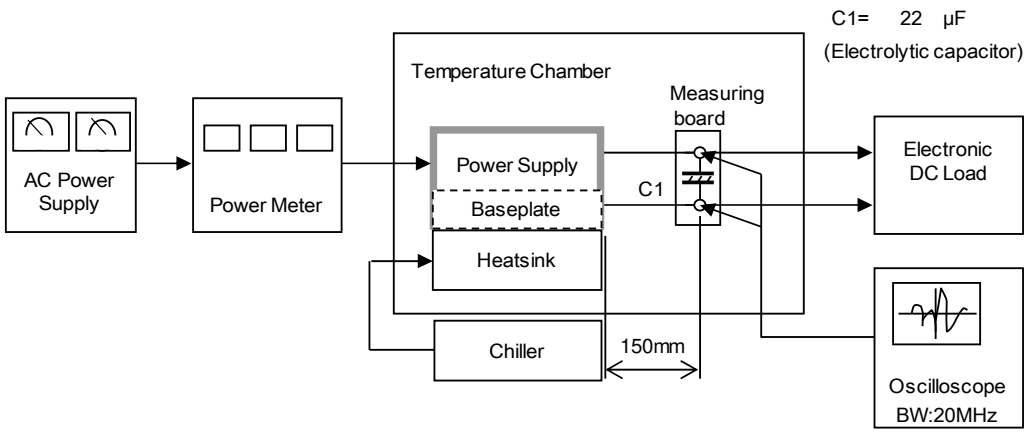
C1= 22 μF
(Electrolytic capacitor)
Temperature Chamber
Measuring board
AC Power Supply
Power Meter
Power Supply
Baseplate
Heatsink
C1
Electronic DC Load
Chiller
150mm
Oscilloscope
BW:20MHz

Figure C