参考資料

TEST DATA OF LHP150F-30-Y

Regulated DC Power Supply
April 5, 2021

Approved by : Junya Kaneda
Design Manager

Prepared by : Yasushi Fukumura
Design Engineer

COSEL CO.,LTD.

参考資料

COSEL

CONTENTS

1.Input Current (by Load Current) ・・・・・・・・・・・・・・・・・・・・・・・・・・ 1
2.Efficiency (by Load Current) ・・・・・・・・・・・・・・・・・・・・・・・・・・・ 2
3.Power Factor (by Load Current) ・・・・・・・・・・・・・・・・・・・・・・・・・・ 3
4.Inrush Current ・・・・・・・・・・・・・・・・・・・・・・・・・・・・・・・・・・・ 4
5.Leakage Current ・・・・・・・・・・・・・・・・・・・・・・・・・・・・・・・・・・ 5
6.Line Regulation ・・・・・・・・・・・・・・・・・・・・・・・・・・・・・・・・・・ 6
7.Load Regulation ・・・・・・・・・・・・・・・・・・・・・・・・・・・・・・・・・・ 7
8.Ripple-Noise ・・・・・・・・・・・・・・・・・・・・・・・・・・・・・・・・・・・ 7
9.Dynamic Load Response ・・・・・・・・・・・・・・・・・・・・・・・・・・・・・・ 8
10.Rise and Fall Time ・・・・・・・・・・・・・・・・・・・・・・・・・・・・・・・・ 9
11.Hold-Up Time ・・・・・・・・・・・・・・・・・・・・・・・・・・・・・・・・・・・ 10
12.Instantaneous Interruption Compensation ・・・・・・・・・・・・・・・・・・・・ 11
13.Overcurrent Protection ・・・・・・・・・・・・・・・・・・・・・・・・・・・・・・ 12
14.Ambient Temperature Drift ・・・・・・・・・・・・・・・・・・・・・・・・・・・・ 13
15.Minimum Input Voltage for Regulated Output Voltage ・・・・・・・・・・・・・ 13
16.Overvoltage Protection ・・・・・・・・・・・・・・・・・・・・・・・・・・・・・・ 13
17.Figure of Testing Circuitry ・・・・・・・・・・・・・・・・・・・・・・・・・・・・ 14
(Final Page 15)

参考資料

COSEL

Model	LHP150F-30-Y
Item	Input Current (by Load Current)
Object	――――――――

Temperature 25°C
Testing Circuitry Figure A

1.Graph

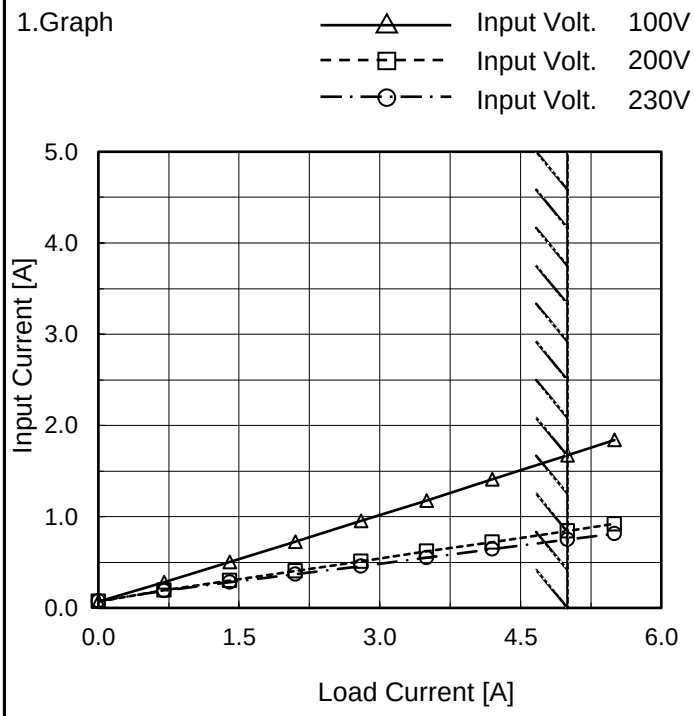

Note: Slanted line shows the range of the rated load current.

2.Values

Load Current [A]	Input Current [A]		
	Input Volt. 100[V]	Input Volt. 200[V]	Input Volt. 230[V]
0.0	0.069	0.069	0.075
0.7	0.282	0.197	0.187
1.4	0.503	0.299	0.281
2.1	0.727	0.404	0.371
2.8	0.952	0.508	0.460
3.5	1.179	0.620	0.551
4.2	1.409	0.718	0.644
5.0	1.673	0.843	0.747
5.5	1.840	0.922	0.813
--	-	-	-
--	-	-	-

BC-11712

COSEL

Model	LHP150F-30-Y
Item	Efficiency (by Load Current)
Object	――――――――

Temperature 25°C
Testing Circuitry Figure A

1.Graph

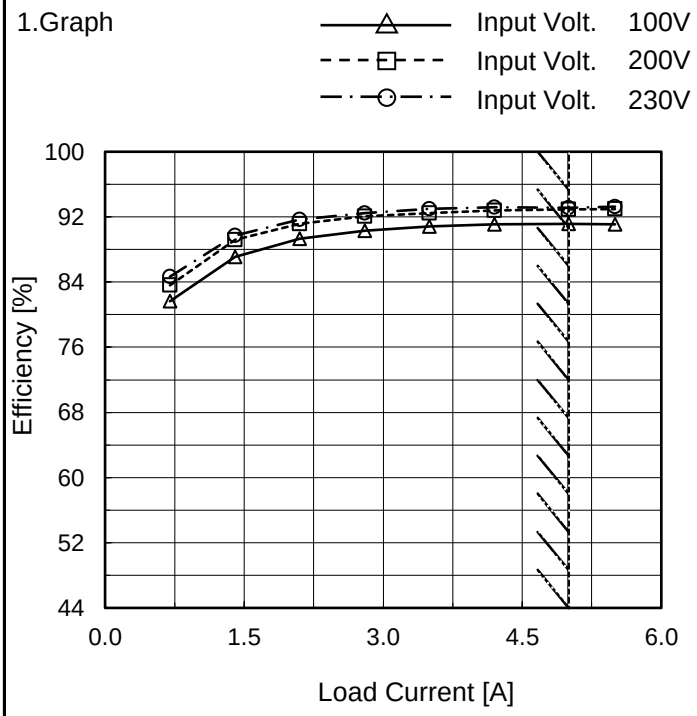

Note: Slanted line shows the range of the rated load current.

2.Values

Load Current [A]	Efficiency [%]		
	Input Volt. 100[V]	Input Volt. 200[V]	Input Volt. 230[V]
0.0	-	-	-
0.7	81.6	83.6	84.7
1.4	87.1	89.2	89.7
2.1	89.3	91.1	91.7
2.8	90.3	92.0	92.4
3.5	90.8	92.5	93.0
4.2	91.1	92.8	93.2
5.0	91.1	92.9	93.2
5.5	91.1	93.0	93.3
--	-	-	-
--	-	-	-

COSEL

Model	LHP150F-30-Y
Item	Power Factor (by Load Current)
Object	――――――――

Temperature 25°C
Testing Circuitry Figure A

1.Graph

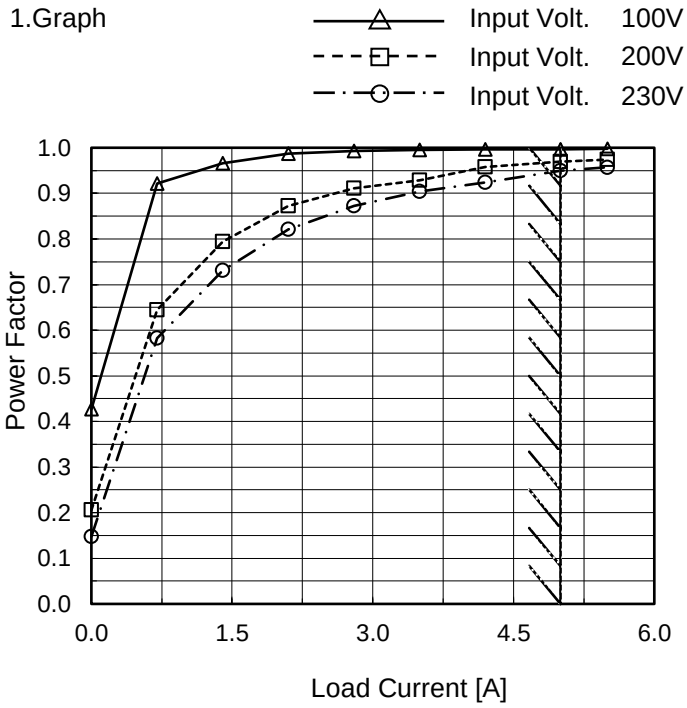

Note: Slanted line shows the range of the rated load current.

2.Values

Load Current [A]	Power Factor		
	Input Volt. 100[V]	Input Volt. 200[V]	Input Volt. 230[V]
0.0	0.427	0.206	0.148
0.7	0.921	0.644	0.582
1.4	0.966	0.794	0.731
2.1	0.988	0.873	0.821
2.8	0.993	0.912	0.872
3.5	0.995	0.929	0.904
4.2	0.996	0.958	0.924
5.0	0.997	0.969	0.950
5.5	0.998	0.974	0.957
--	-	-	-
--	-	-	-

COSEL

Model	LHP150F-30-Y		
Item	Inrush Current	Temperature	25°C
		Testing Circuitry	Figure A
Object	――――――		

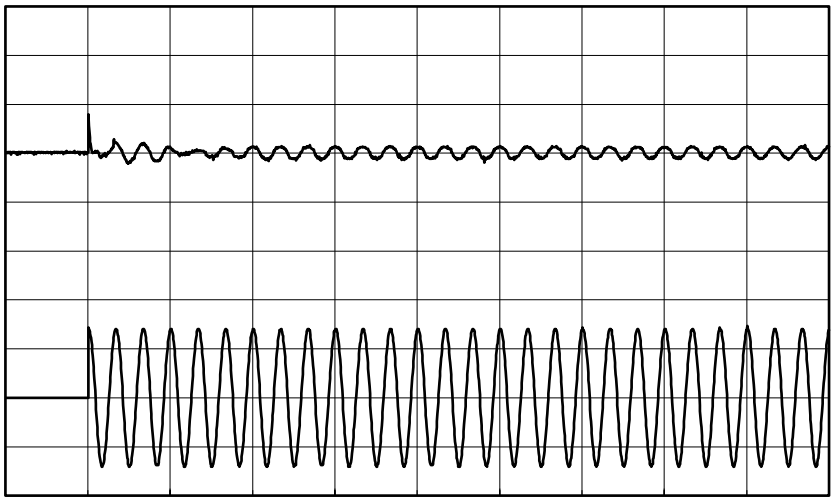

Input Current [20A/div]

Input Voltage [100V/div]

Time [50ms/div]

Input Voltage 100 V
Frequency 60 Hz
Load 100 %

Primary inrush current : 13.6 A
Secondary inrush current : 3.9 A

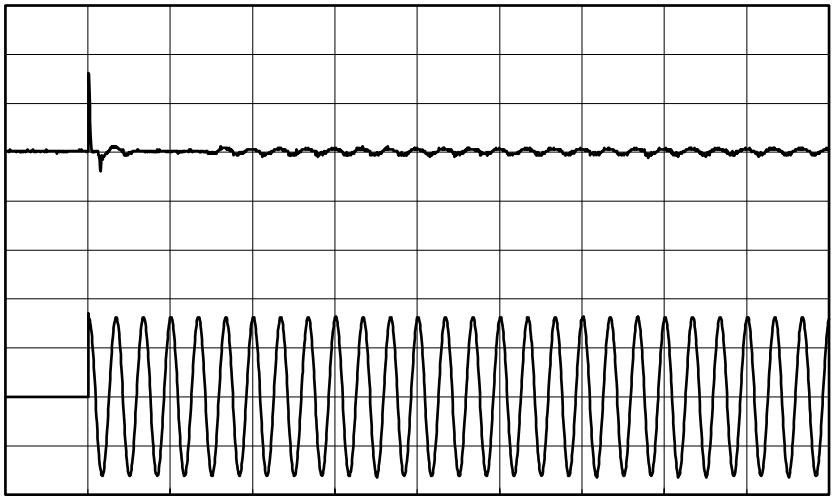

Input Current [20A/div]

Input Voltage [200V/div]

Time [50ms/div]

Input Voltage 230 V
Frequency 60 Hz
Load 100 %

Primary inrush current : 32.2 A
Secondary inrush current : 2.6 A

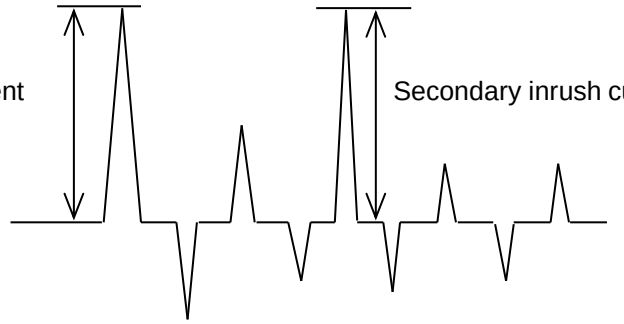

COSEL

Model	LHP150F-30-Y	
Item	Leakage Current	Temperature 25°C Testing Circuitry Figure C
Object	――――――――――	

1.Results

[mA]

Standards	Testing Circuitry	Measuring Method	Input Volt.			Note
			100 [V]	230 [V]	240 [V]	
DEN-AN	Figure C-1	Both phases	0.15	0.36	0.37	Operation
		One of phases	0.27	0.64	0.70	Stand by
IEC62368-1	Figure C-2	Both phases	0.13	0.34	0.35	Operation
		One of phases	0.25	0.64	0.67	Stand by
	Figure C-3	Both phases	0.13	0.33	0.34	Operation
		One of phases	0.25	0.62	0.65	Stand by

The value for "One of phases" is the reference value only.

2.Condition

Leakage current value is concluded after measuring both phases of AC input and by choosing the larger one.

COSEL

Model	LHP150F-30-Y
Item	Line Regulation
Object	+30V5A

Temperature 25°C
Testing Circuitry Figure A

1.Graph

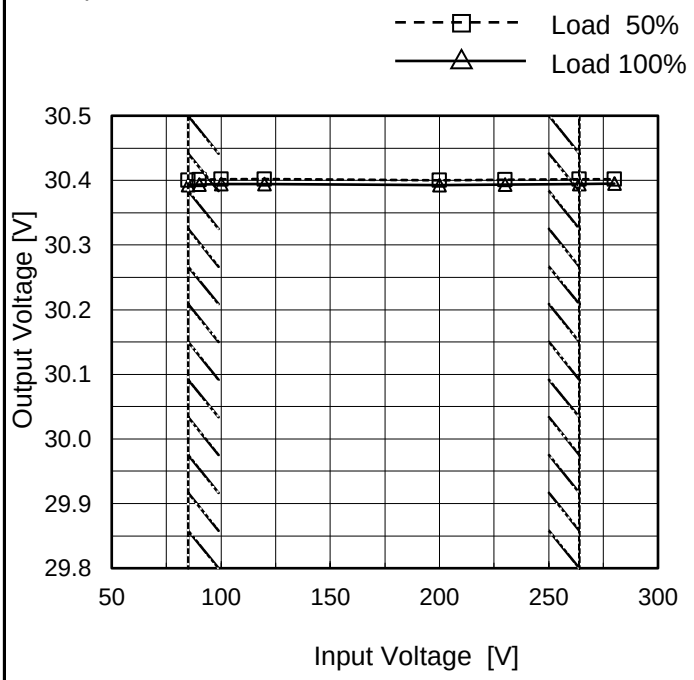

Note: Slanted line shows the range of the rated input voltage.

2.Values

Input Voltage [V]	Output Voltage [V]	
	Load 50%	Load 100%
85	30.400	30.393
90	30.401	30.393
100	30.402	30.395
120	30.402	30.394
200	30.400	30.393
230	30.401	30.394
264	30.402	30.395
280	30.402	30.395
--	-	-

COSEL

Model	LHP150F-30-Y
Item	Load Regulation
Object	+30V5A

Temperature 25°C
Testing Circuitry Figure A

1.Graph

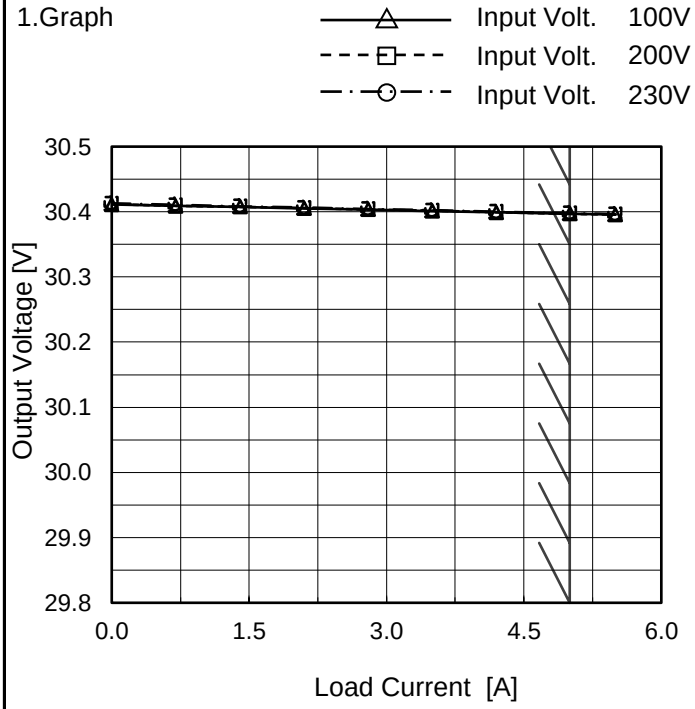

Note: Slanted line shows the range of the rated load current.

2.Values

Load Current [A]	Output Voltage [V] Input Volt. 100[V]	Input Volt. 200[V]	Input Volt. 230[V]
0.0	30.411	30.412	30.413
0.7	30.409	30.409	30.411
1.4	30.408	30.408	30.409
2.1	30.405	30.406	30.406
2.8	30.403	30.404	30.405
3.5	30.401	30.401	30.402
4.2	30.399	30.400	30.400
5.0	30.397	30.397	30.398
5.5	30.396	30.396	30.397
--	--	--	--
--	--	--	--

Item	Ripple-Noise
Object	+30V5A

Temperature 25°C
Testing Circuitry Figure B

1.Graph

Input Voltage 230V
Load 100%

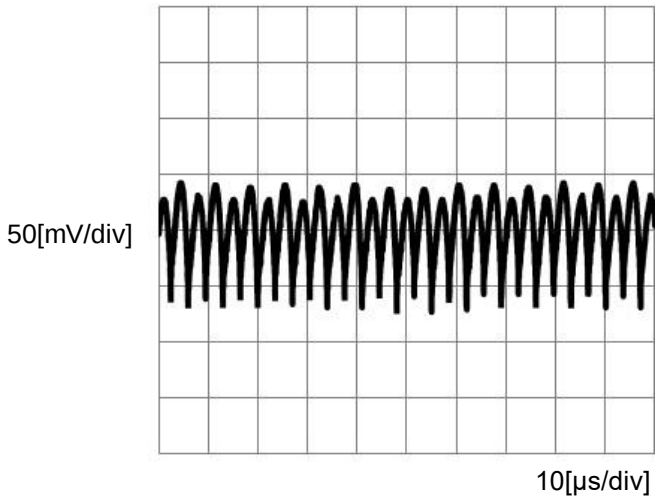

BC-11712

COSEL

Model	LHP150F-30-Y	
Item	Dynamic Load Response	Temperature 25°C Testing Circuitry Figure A
Object	+30V5A	

Input Volt. 230 V

Cycle 1000 ms

Response. t1=t2=50µs. Typ

Load 0%(0A) ←→
Load 100%(5A)

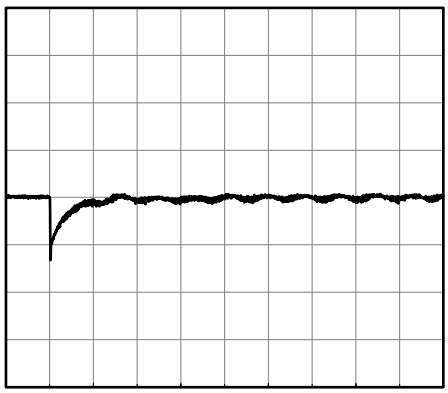

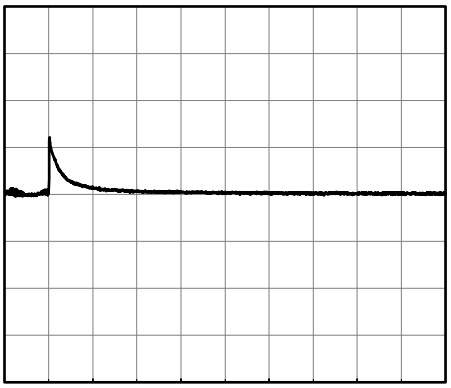

200[mV/div]

10[ms/div]

10[ms/div]

Load 50%(2.5A) ←→
Load 100%(5A)

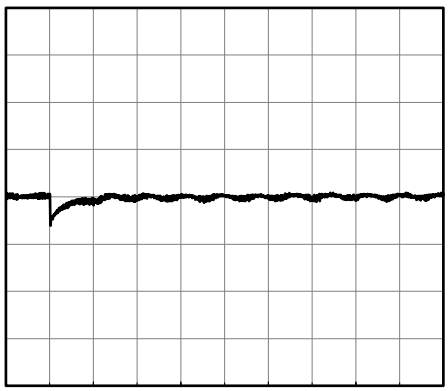

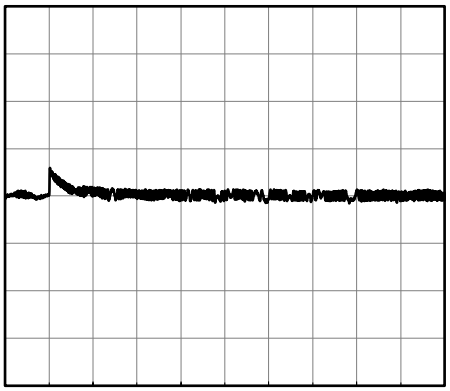

200[mV/div]

10[ms/div]

10[ms/div]

COSEL

Model	LHP150F-30-Y	
Item	Rise and Fall Time	Temperature 25°C Testing Circuitry Figure A
Object	+30V5A	

1.Graph

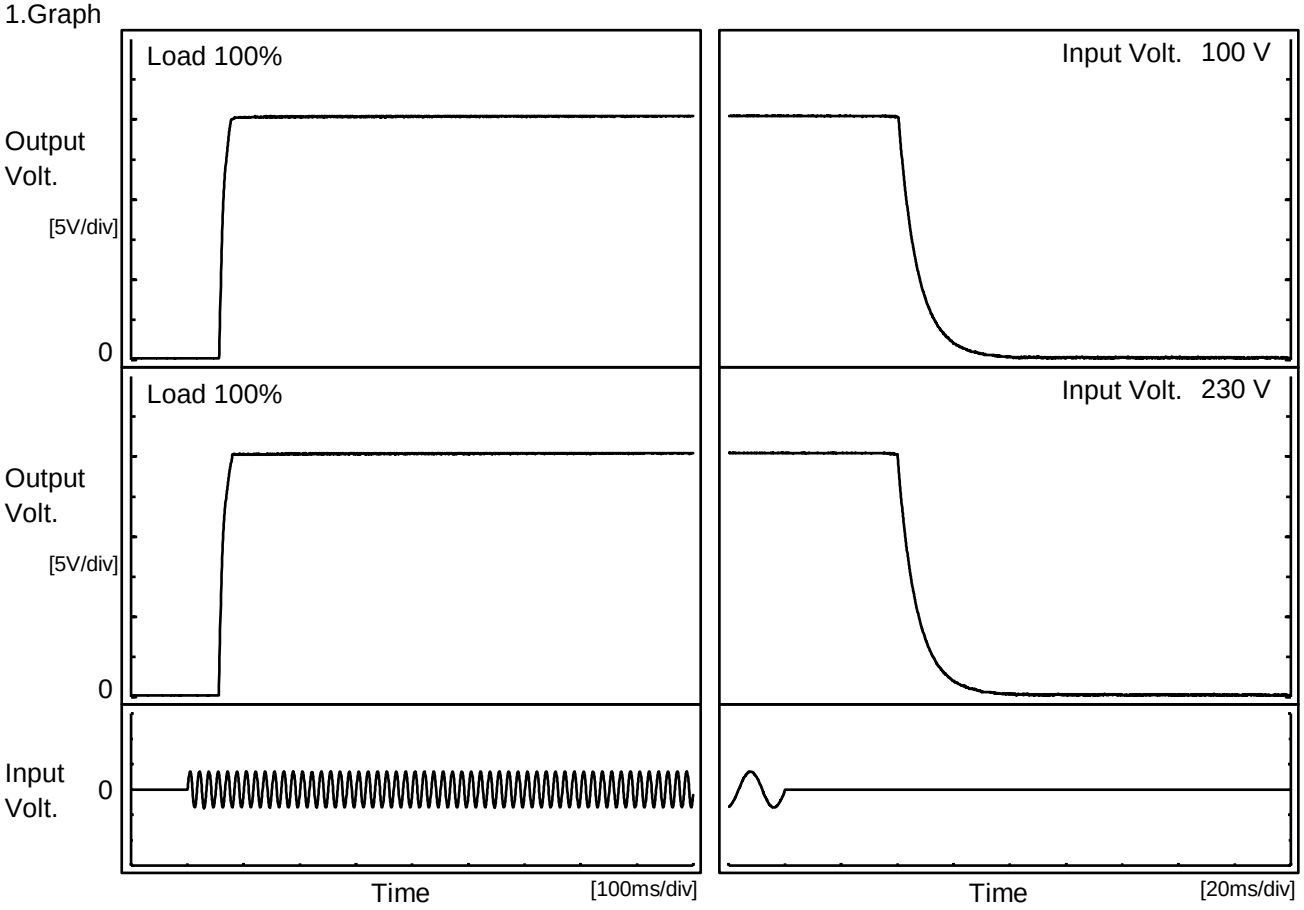

2.Values

[ms]

Input Volt. \ Time	Td	Tr	Ts	Th	Tf
100 V	58.0	15.0	73.0	41.1	15.7
230 V	57.5	16.0	73.5	40.7	15.5

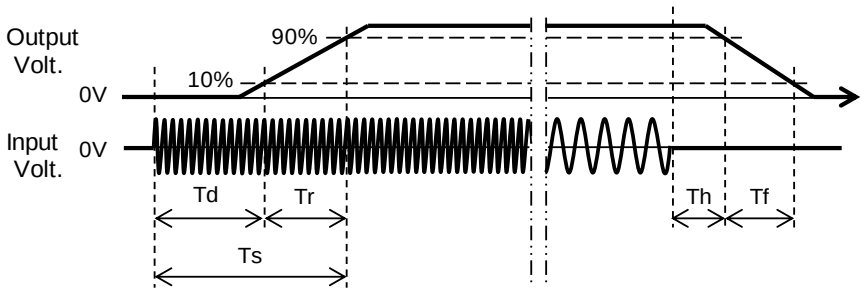

COSEL

Model	LHP150F-30-Y
Item	Hold-Up Time
Object	+30V5A

Temperature 25°C
Testing Circuitry Figure A

1.Graph

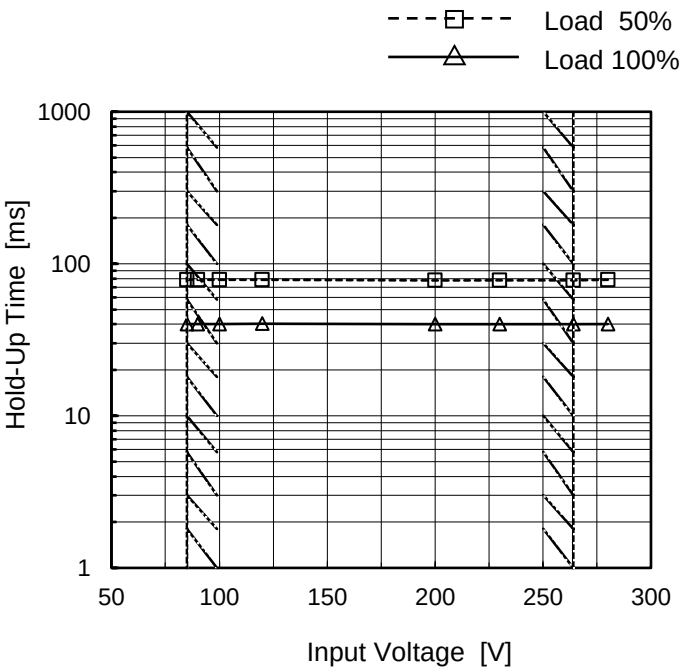

This duration covers from Shut-off of input voltage to the moment when output voltage descends to the rated range of voltage accuracy.
Note: Slanted line shows the range of the rated input voltage.

2.Values

Input Voltage [V]	Hold-Up Time [ms]	
	Load 50%	Load 100%
85	78	40
90	78	40
100	78	40
120	78	40
200	78	40
230	78	40
264	78	40
280	79	40
--	-	-

COSEL

Model	LHP150F-30-Y
Item	Instantaneous Interruption Compensation
Object	+30V5A

Temperature 25°C
Testing Circuitry Figure A

1.Graph

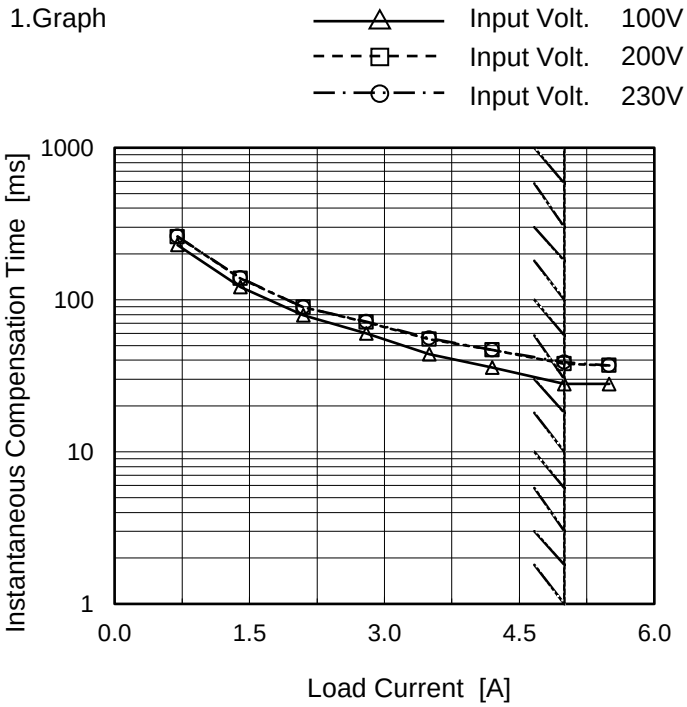

Note: Slanted line shows the range of the rated load current.

2.Values

Load Current [A]	Time [ms]		
	Input Volt. 100[V]	Input Volt. 200[V]	Input Volt. 230[V]
0.0	-	-	-
0.7	229	260	261
1.4	121	138	139
2.1	79	89	89
2.8	60	71	72
3.5	44	55	56
4.2	36	47	47
5.0	28	38	39
5.5	28	37	37
--	-	-	-
--	-	-	-

COSEL

Model	LHP150F-30-Y
Item	Overcurrent Protection
Object	+30V5A

Temperature 25°C
Testing Circuitry Figure A

1.Graph

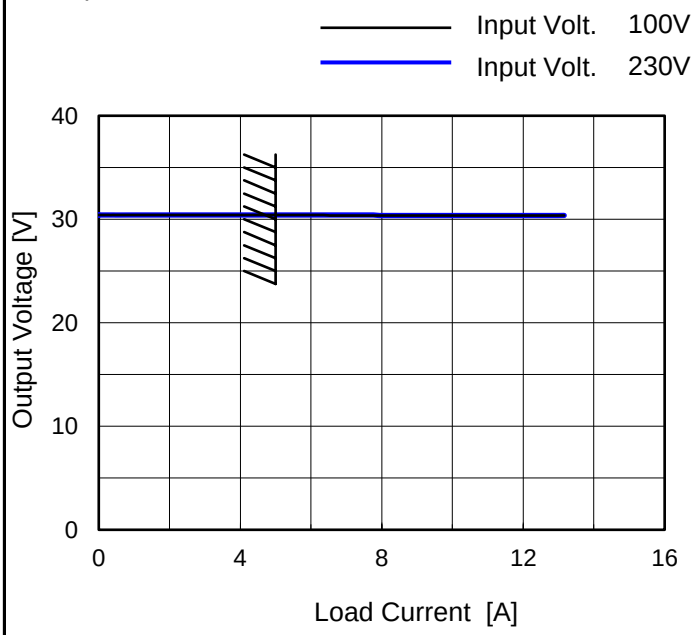

Note: Slanted line shows the range of the rated load current.

Overcurrent protection is Hiccup mode.

2.Values

Output Voltage [V]	Load Current [A]	
	Input Volt. 100[V]	Input Volt. 230[V]
30	13.16	13.16
--	-	-
--	-	-
--	-	-
--	-	-
--	-	-
--	-	-
--	-	-
--	-	-
--	-	-
--	-	-
--	-	-

COSEL

Model	LHP150F-30-Y
Item	Ambient Temperature Drift
Object	+30V5A

Testing Circuitry Figure A

1.Values

Load 100%

Ambient Temperature[℃]	Output Voltage [V]		
	Input Volt. 100V	Input Volt. 200V	Input Volt. 230V
-10	30.323	30.323	30.323
25	30.398	30.399	30.399
50	30.432	30.432	30.432

Item	Minimum Input Voltage for Regulated Output Voltage
Object	+30V5A

Testing Circuitry Figure A

1.Values

Ambient Temperature[℃]	Input Voltage [V]	
	Load 50%	Load 100%
-10	74	74
25	74	75
50	74	75

Item	Overvoltage Protection
Object	+30V5A

Testing Circuitry Figure A

1.Values

Load 0%

Ambient Temperature[℃]	Operating Point [V]	
	Input Volt. 100V	Input Volt. 230V
-10	37.45	37.45
25	38.57	38.56
50	39.27	39.27

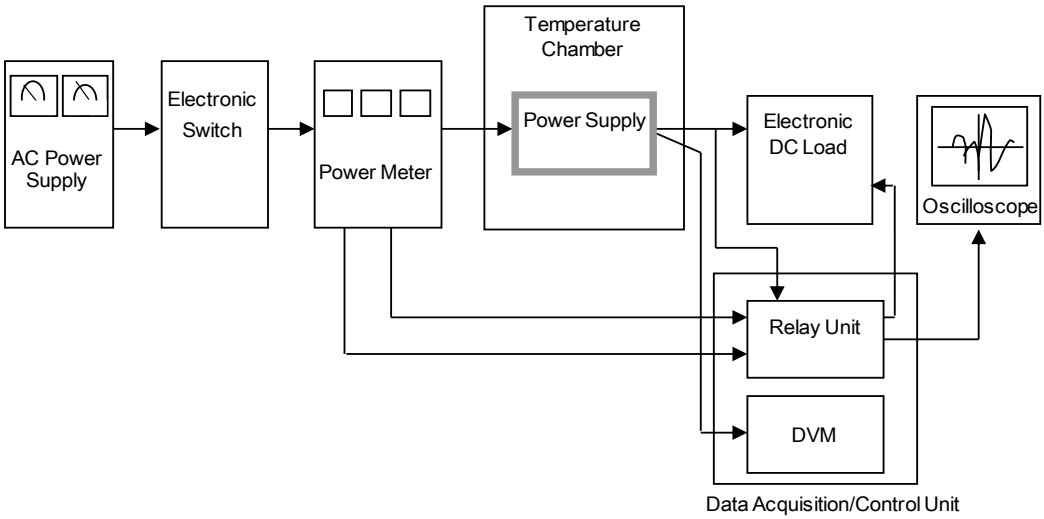

Figure A

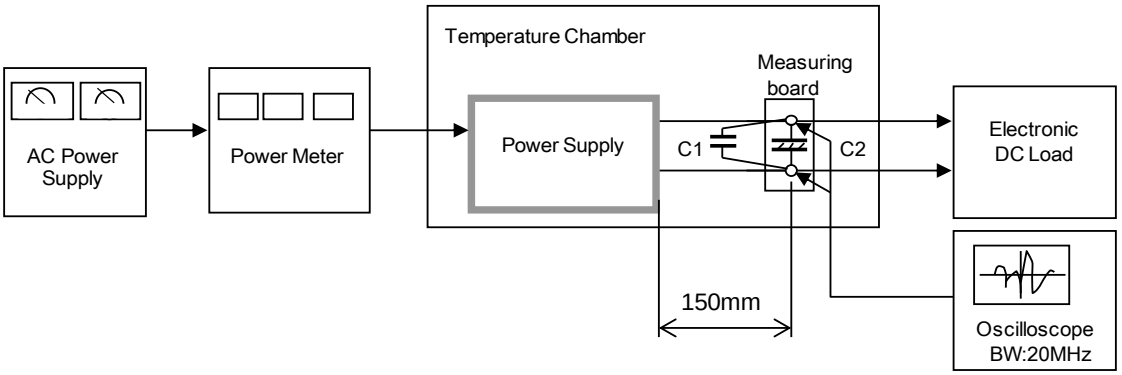

C1= 0.1 μF
(Ceramic capacitor)

C2= 22 μF
(Electrolytic capacitor)

Figure B

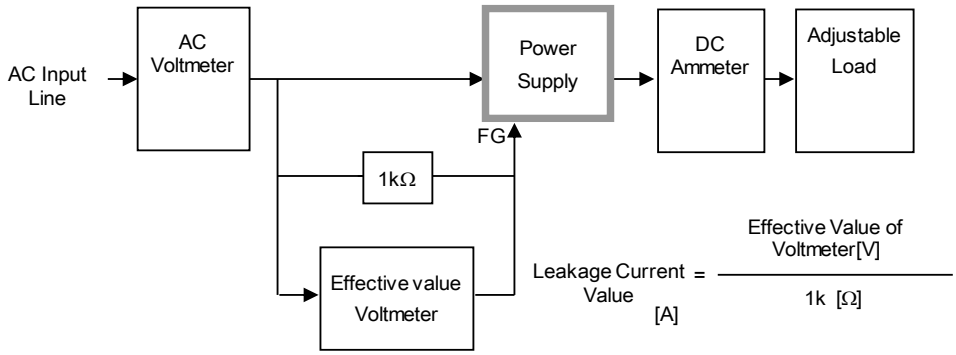

Figure C-1 (DEN-AN)

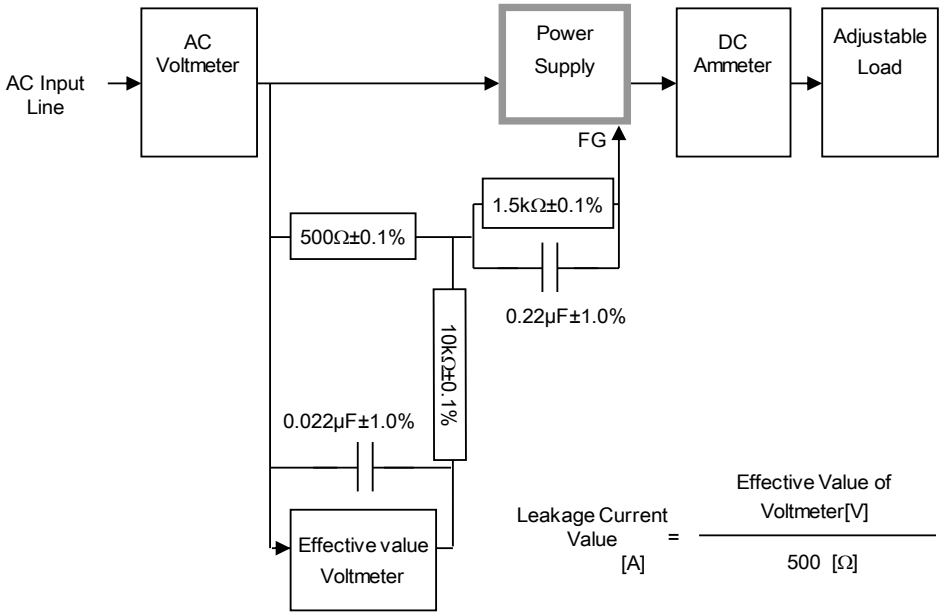

Figure C-2 (IEC62368-1 refer to IEC60990 Fig.4)

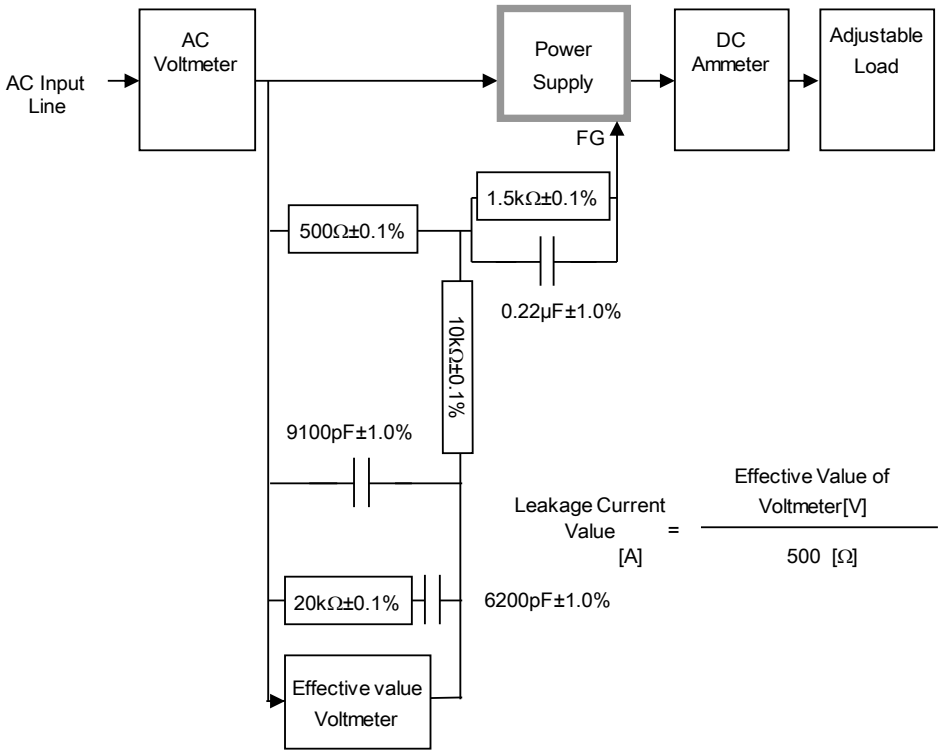

Figure C-3 (IEC62368-1 refer to IEC60990 Fig.5)