COSEL

参考資料

TEST DATA OF LHP150F-36-Y

Regulated DC Power Supply
April 5, 2021

Approved by : Junya Kaneda
Design Manager

Prepared by : Yasushi Fukumura
Design Engineer

COSEL CO.,LTD.

参考資料

COSEL

CONTENTS

1.Input Current (by Load Current) ・・・・・・・・・・・・・・・・・・・・・・・・・・ 1
2.Efficiency (by Load Current) ・・・・・・・・・・・・・・・・・・・・・・・・・・・ 2
3.Power Factor (by Load Current) ・・・・・・・・・・・・・・・・・・・・・・・・・・ 3
4.Inrush Current ・・・・・・・・・・・・・・・・・・・・・・・・・・・・・・・・・・・ 4
5.Leakage Current ・・・・・・・・・・・・・・・・・・・・・・・・・・・・・・・・・・ 5
6.Line Regulation ・・・・・・・・・・・・・・・・・・・・・・・・・・・・・・・・・・ 6
7.Load Regulation ・・・・・・・・・・・・・・・・・・・・・・・・・・・・・・・・・・ 7
8.Ripple-Noise ・・・・・・・・・・・・・・・・・・・・・・・・・・・・・・・・・・・ 7
9.Dynamic Load Response ・・・・・・・・・・・・・・・・・・・・・・・・・・・・・・ 8
10.Rise and Fall Time ・・・・・・・・・・・・・・・・・・・・・・・・・・・・・・・・ 9
11.Hold-Up Time ・・・・・・・・・・・・・・・・・・・・・・・・・・・・・・・・・・・ 10
12.Instantaneous Interruption Compensation ・・・・・・・・・・・・・・・・・・・・ 11
13.Overcurrent Protection ・・・・・・・・・・・・・・・・・・・・・・・・・・・・・・ 12
14.Ambient Temperature Drift ・・・・・・・・・・・・・・・・・・・・・・・・・・・・ 13
15.Minimum Input Voltage for Regulated Output Voltage ・・・・・・・・・・・・・ 13
16.Overvoltage Protection ・・・・・・・・・・・・・・・・・・・・・・・・・・・・・・ 13
17.Figure of Testing Circuitry ・・・・・・・・・・・・・・・・・・・・・・・・・・・・ 14
(Final Page 15)

参考資料

COSEL

Model	LHP150F-36-Y
Item	Input Current (by Load Current)
Object	――――――――

Temperature 25°C
Testing Circuitry Figure A

1.Graph

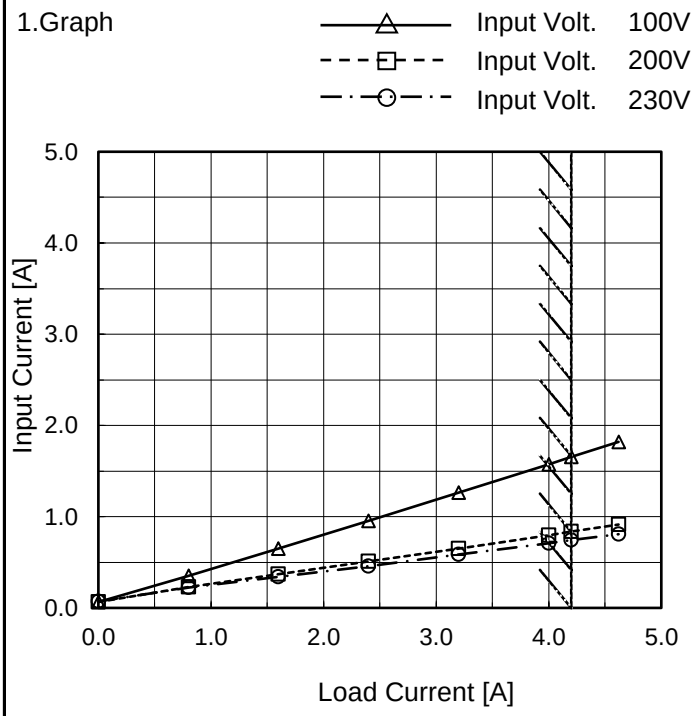

Note: Slanted line shows the range of the rated load current.

2.Values

Load Current [A]	Input Current [A]		
	Input Volt. 100[V]	Input Volt. 200[V]	Input Volt. 230[V]
0.00	0.065	0.065	0.071
0.80	0.353	0.231	0.221
1.60	0.651	0.367	0.340
2.40	0.956	0.508	0.460
3.20	1.265	0.651	0.583
4.00	1.576	0.798	0.709
4.20	1.654	0.836	0.741
4.62	1.820	0.914	0.808
--	-	-	-
--	-	-	-
--	-	-	-

BC-11713

COSEL

Model	LHP150F-36-Y
Item	Efficiency (by Load Current)
Object	――――――――

Temperature 25°C
Testing Circuitry Figure A

1.Graph

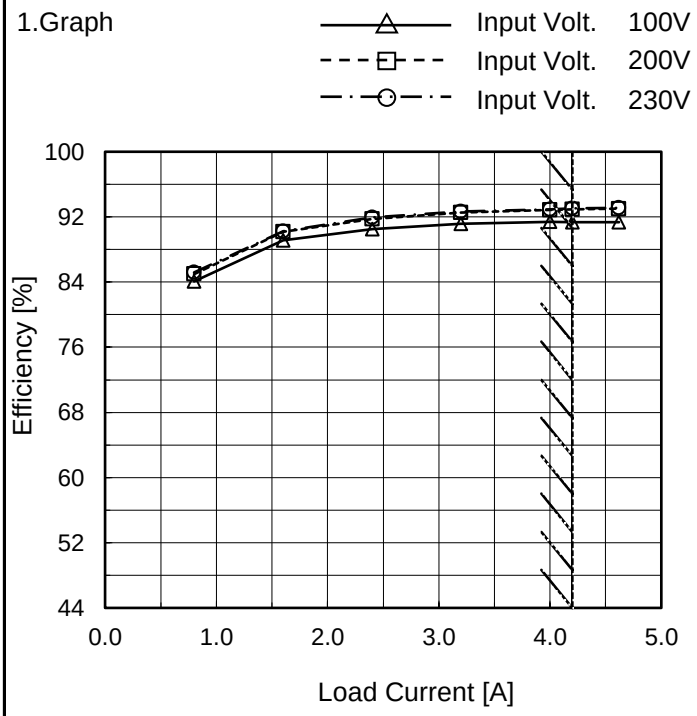

Note: Slanted line shows the range of the rated load current.

2.Values

Load Current [A]	Efficiency [%]		
	Input Volt. 100[V]	Input Volt. 200[V]	Input Volt. 230[V]
0.00	-	-	-
0.80	84.1	85.0	85.2
1.60	89.1	90.2	90.2
2.40	90.5	91.7	91.9
3.20	91.2	92.5	92.7
4.00	91.4	92.8	93.0
4.20	91.4	92.9	93.0
4.62	91.4	93.0	93.1
--	-	-	-
--	-	-	-
--	-	-	-

COSEL

Model	LHP150F-36-Y
Item	Power Factor (by Load Current)
Object	――――――――

Temperature 25°C
Testing Circuitry Figure A

1.Graph

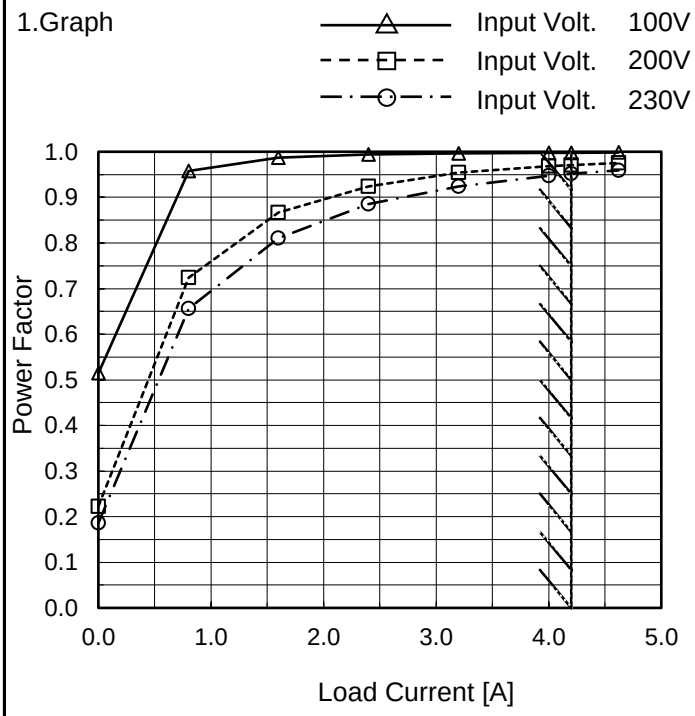

Note: Slanted line shows the range of the rated load current.

2.Values

Load Current [A]	Power Factor		
	Input Volt. 100[V]	Input Volt. 200[V]	Input Volt. 230[V]
0.00	0.514	0.223	0.186
0.80	0.958	0.724	0.656
1.60	0.988	0.866	0.811
2.40	0.994	0.924	0.885
3.20	0.996	0.954	0.924
4.00	0.997	0.969	0.947
4.20	0.998	0.971	0.952
4.62	0.998	0.975	0.959
--	-	-	-
--	-	-	-
--	-	-	-

BC-11713

COSEL

Model	LHP150F-36-Y		
Item	Inrush Current	Temperature	25°C
		Testing Circuitry	Figure A
Object	――――――		

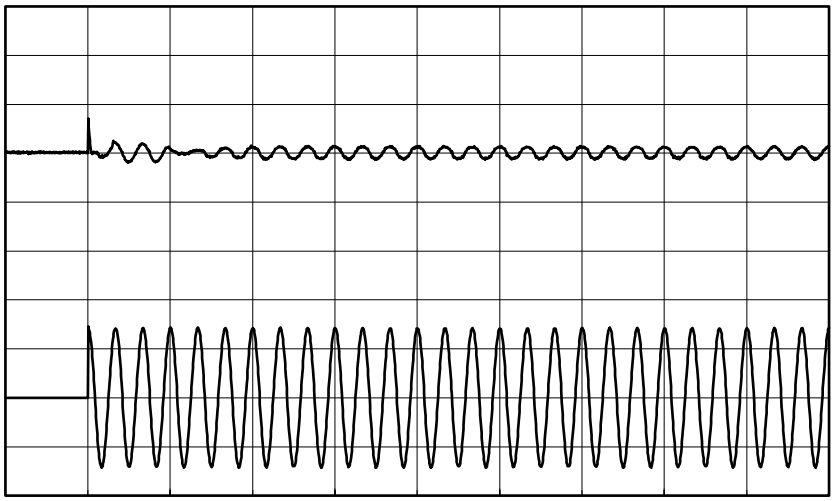

Input Voltage 100 V
Frequency 60 Hz
Load 100 %

Primary inrush current : 13.9 A
Secondary inrush current : 3.1 A

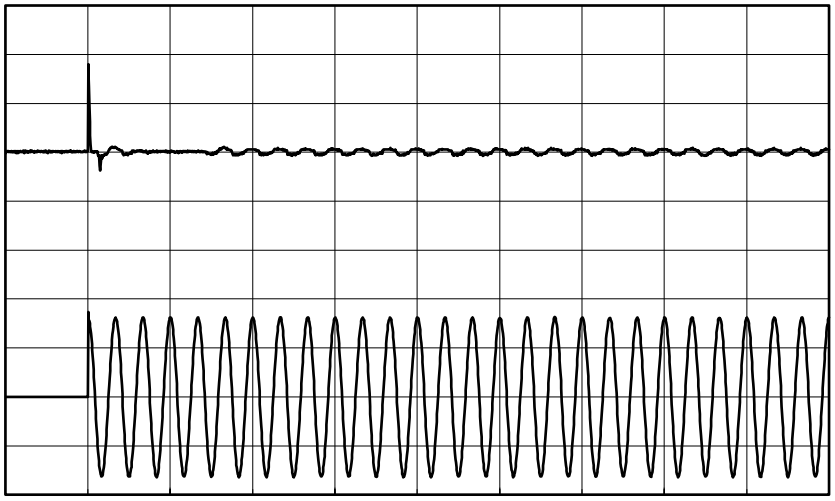

Input Voltage 230 V
Frequency 60 Hz
Load 100 %

Primary inrush current : 35 A
Secondary inrush current : 2.0 A

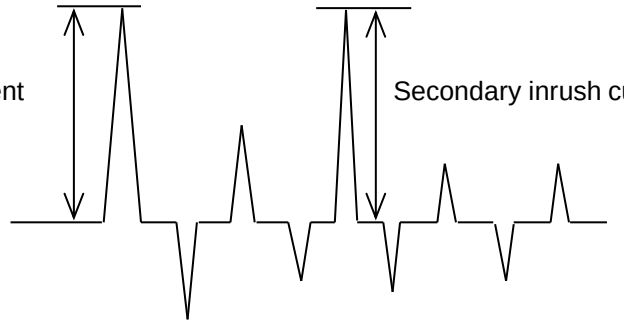

COSEL

Model	LHP150F-36-Y	
Item	Leakage Current	Temperature 25°C Testing Circuitry Figure C
Object	――――――――――	

1.Results

[mA]

Standards	Testing Circuitry	Measuring Method	Input Volt.			Note
			100 [V]	230 [V]	240 [V]	
DEN-AN	Figure C-1	Both phases	0.15	0.36	0.37	Operation
		One of phases	0.27	0.64	0.70	Stand by
IEC62368-1	Figure C-2	Both phases	0.13	0.34	0.35	Operation
		One of phases	0.25	0.64	0.67	Stand by
	Figure C-3	Both phases	0.13	0.33	0.34	Operation
		One of phases	0.25	0.62	0.65	Stand by

The value for "One of phases" is the reference value only.

2.Condition

Leakage current value is concluded after measuring both phases of AC input and by choosing the larger one.

COSEL

Model	LHP150F-36-Y
Item	Line Regulation
Object	+36V4.2A

Temperature 25°C
Testing Circuitry Figure A

1.Graph

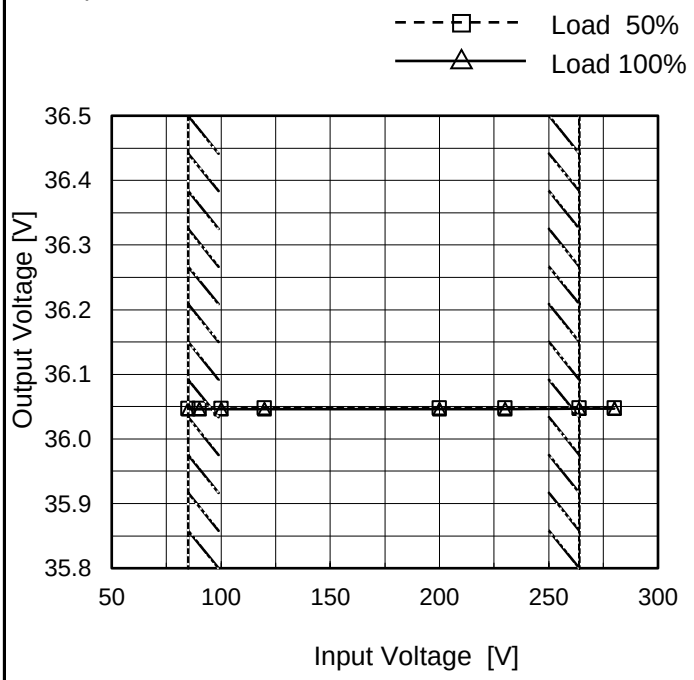

Note: Slanted line shows the range of the rated input voltage.

2.Values

Input Voltage [V]	Output Voltage [V]	
	Load 50%	Load 100%
85	36.047	36.046
90	36.047	36.046
100	36.047	36.046
120	36.047	36.046
200	36.048	36.046
230	36.048	36.047
264	36.048	36.047
280	36.048	36.047
--	-	-

BC-11713

COSEL

Model	LHP150F-36-Y
Item	Load Regulation
Object	+36V4.2A

Temperature 25°C
Testing Circuitry Figure A

1.Graph

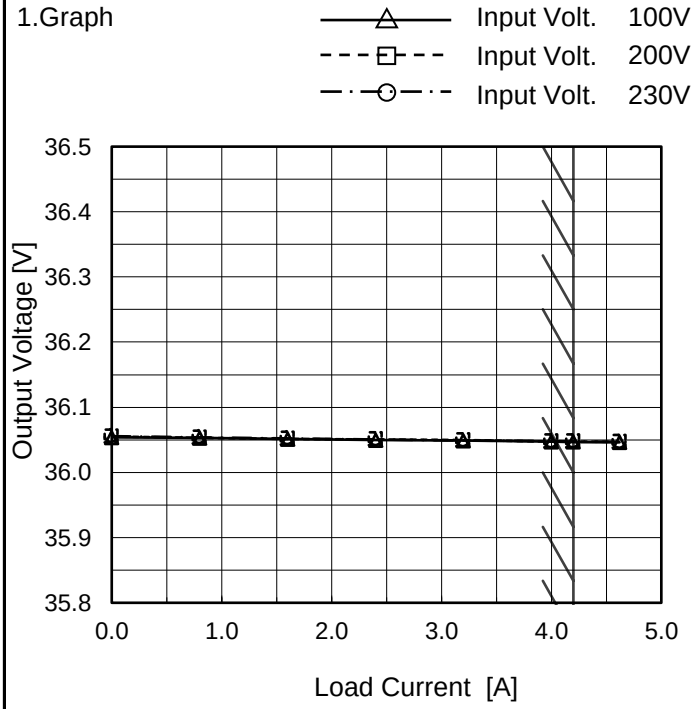

Note: Slanted line shows the range of the rated load current.

2.Values

Load Current [A]	Output Voltage [V] Input Volt. 100[V]	Input Volt. 200[V]	Input Volt. 230[V]
0.00	36.054	36.055	36.056
0.80	36.053	36.053	36.054
1.60	36.051	36.052	36.053
2.40	36.050	36.051	36.051
3.20	36.049	36.050	36.049
4.00	36.047	36.048	36.048
4.20	36.047	36.047	36.047
4.62	36.046	36.047	36.047
--	--	--	--
--	--	--	--
--	--	--	--

Item	Ripple-Noise
Object	+36V4.2A

Temperature 25°C
Testing Circuitry Figure B

1.Graph

Input Voltage 230V
Load 100%

50[mV/div]

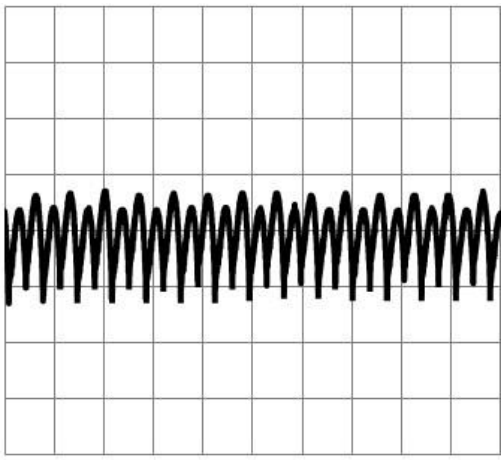

10[μs/div]

BC-11713

COSEL

Model	LHP150F-36-Y	
Item	Dynamic Load Response	Temperature 25°C Testing Circuitry Figure A
Object	+36V4.2A	

Input Volt. 230 V

Cycle 1000 ms

Response. t1=t2=50µs. Typ

Load 0%(0A) ←→
Load 100%(4.2A)

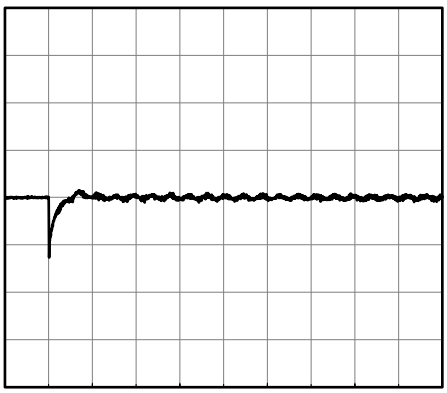

200[mV/div]

20[ms/div]

20[ms/div]

Load 50%(2.1A) ←→
Load 100%(4.2A)

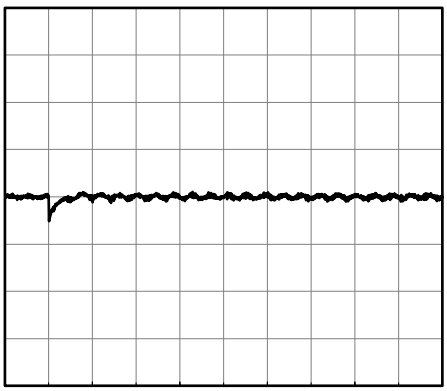

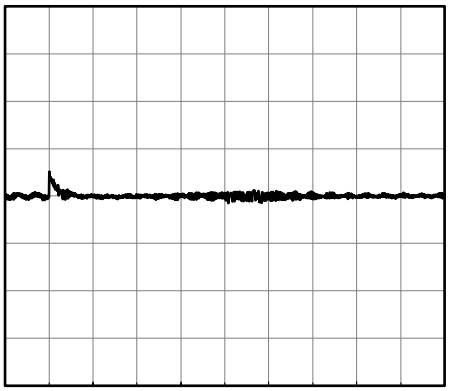

200[mV/div]

20[ms/div]

20[ms/div]

COSEL

Model	LHP150F-36-Y	
Item	Rise and Fall Time	Temperature 25°C Testing Circuitry Figure A
Object	+36V4.2A	

1.Graph

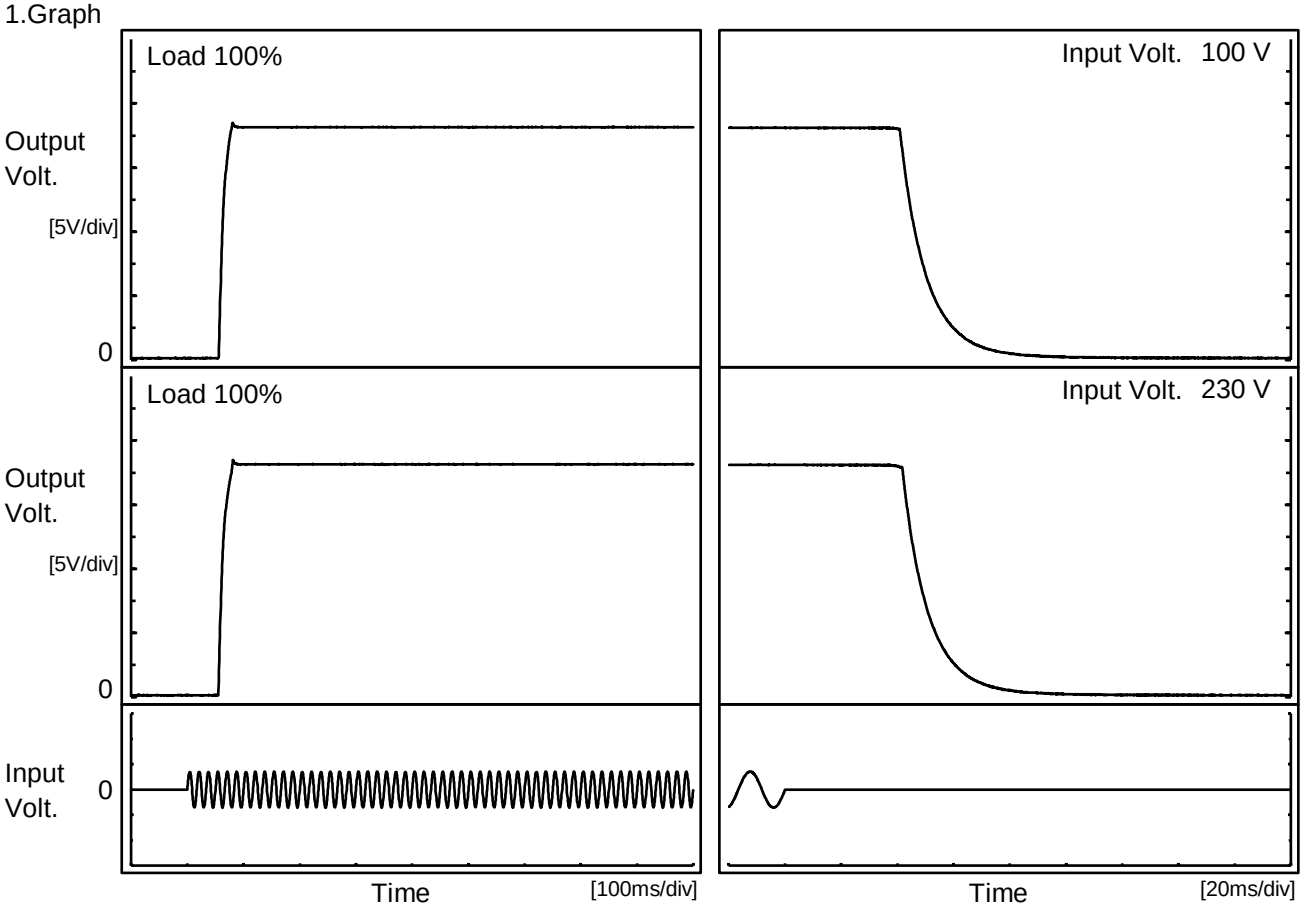

2.Values

[ms]

Input Volt. \ Time	Td	Tr	Ts	Th	Tf
100 V	57.5	15.5	73.0	41.7	21.2
230 V	56.5	17.5	74.0	42.5	20.9

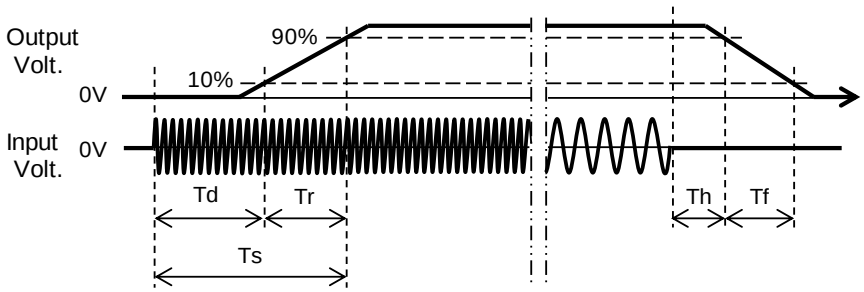

COSEL

Model	LHP150F-36-Y
Item	Hold-Up Time
Object	+36V4.2A

Temperature 25°C
Testing Circuitry Figure A

1.Graph

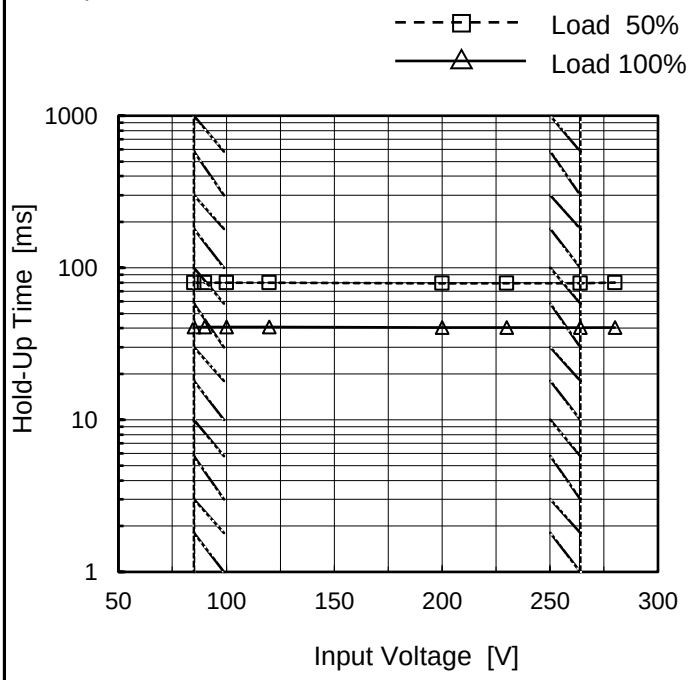

This duration covers from Shut-off of input voltage to the moment when output voltage descends to the rated range of voltage accuracy.
Note: Slanted line shows the range of the rated input voltage.

2.Values

Input Voltage [V]	Hold-Up Time [ms]	
	Load 50%	Load 100%
85	80	41
90	80	41
100	80	41
120	80	41
200	79	41
230	79	40
264	79	40
280	80	40
--	-	-

COSEL

Model	LHP150F-36-Y
Item	Instantaneous Interruption Compensation
Object	+36V4.2A

Temperature 25°C
Testing Circuitry Figure A

1.Graph

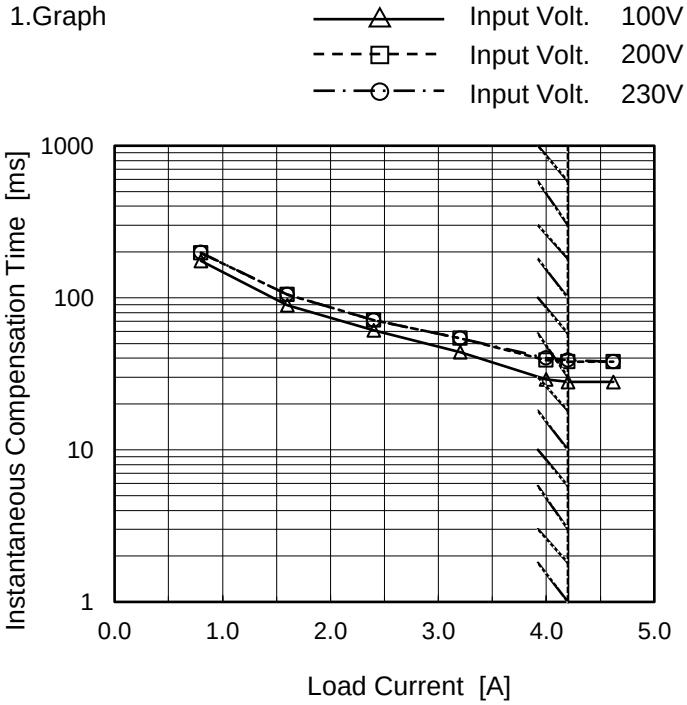

Note: Slanted line shows the range of the rated load current.

2.Values

Load Current [A]	Time [ms]		
	Input Volt. 100[V]	Input Volt. 200[V]	Input Volt. 230[V]
0.00	-	-	-
0.80	175	197	198
1.60	89	105	105
2.40	61	71	71
3.20	44	54	54
4.00	29	39	40
4.20	28	38	39
4.62	28	38	38
--	-	-	-
--	-	-	-
--	-	-	-

BC-11713

COSEL

Model	LHP150F-36-Y
Item	Overcurrent Protection
Object	+36V4.2A

Temperature 25°C
Testing Circuitry Figure A

1.Graph

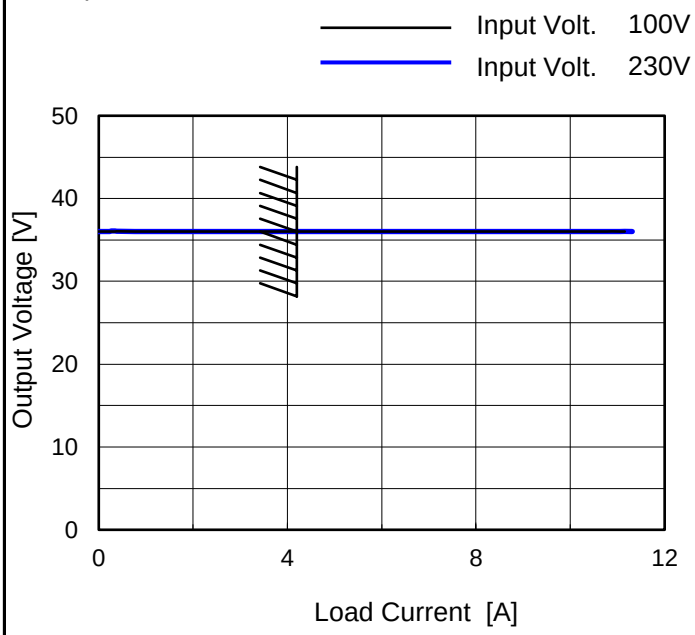

Note: Slanted line shows the range of the rated load current.

Overcurrent protection is Hiccup mode.

2.Values

Output Voltage [V]	Load Current [A]	
	Input Volt. 100[V]	Input Volt. 230[V]
36	11.15	11.31
--	-	-
--	-	-
--	-	-
--	-	-
--	-	-
--	-	-
--	-	-
--	-	-
--	-	-
--	-	-
--	-	-

COSEL

Model	LHP150F-36-Y
Item	Ambient Temperature Drift
Object	+36V4.2A

Testing Circuitry Figure A

1.Values

Load 100%

Ambient Temperature[℃]	Output Voltage [V]		
	Input Volt. 100V	Input Volt. 200V	Input Volt. 230V
-10	35.919	35.919	35.919
25	36.043	36.043	36.044
50	36.099	36.100	36.100

Item	Minimum Input Voltage for Regulated Output Voltage
Object	+36V4.2A

Testing Circuitry Figure A

1.Values

Ambient Temperature[℃]	Input Voltage [V]	
	Load 50%	Load 100%
-10	75	76
25	76	76
50	76	77

Item	Overvoltage Protection
Object	+36V4.2A

Testing Circuitry Figure A

1.Values

Load 0%

Ambient Temperature[℃]	Operating Point [V]	
	Input Volt. 100V	Input Volt. 230V
-10	44.68	44.61
25	46.01	46.01
50	46.99	46.99

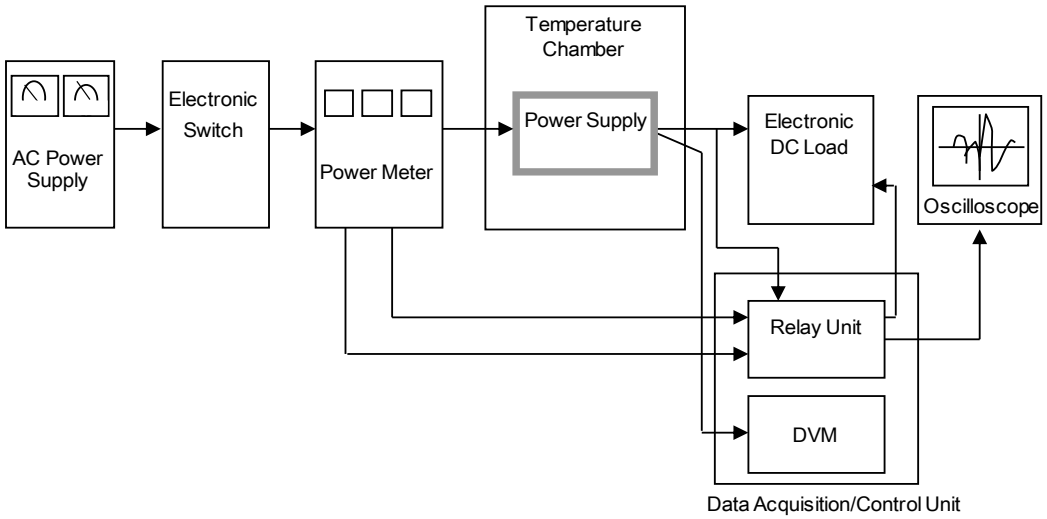

Figure A

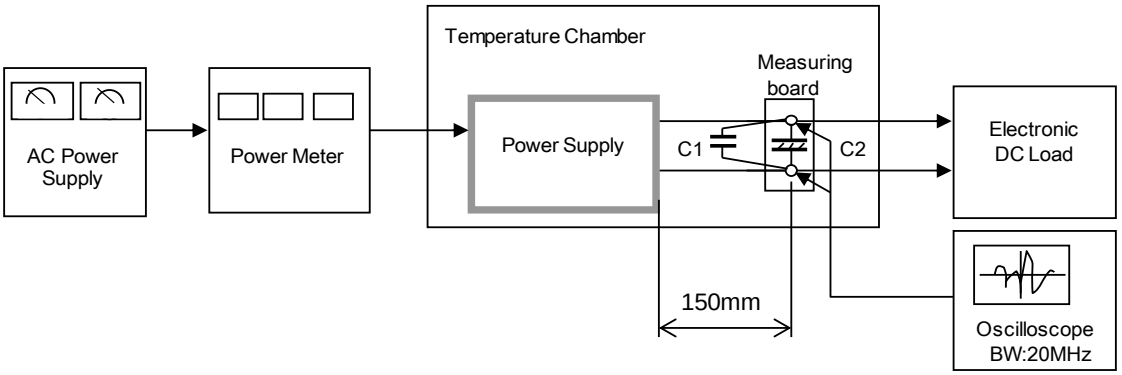

C1= 0.1 μF
(Ceramic capacitor)

C2= 22 μF
(Electrolytic capacitor)

Figure B

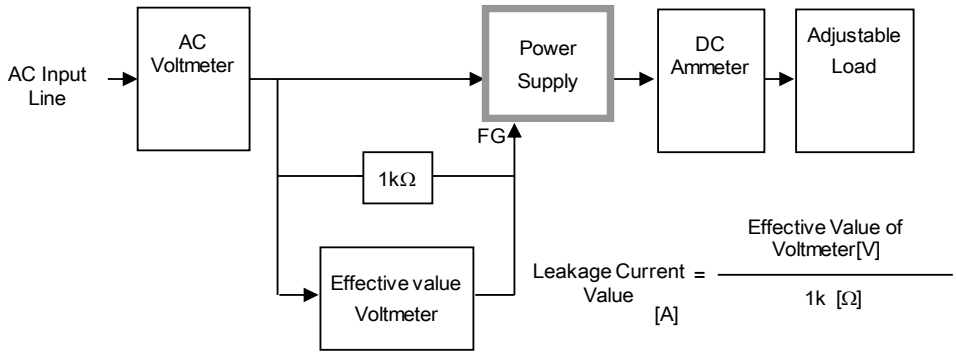

Figure C-1 (DEN-AN)

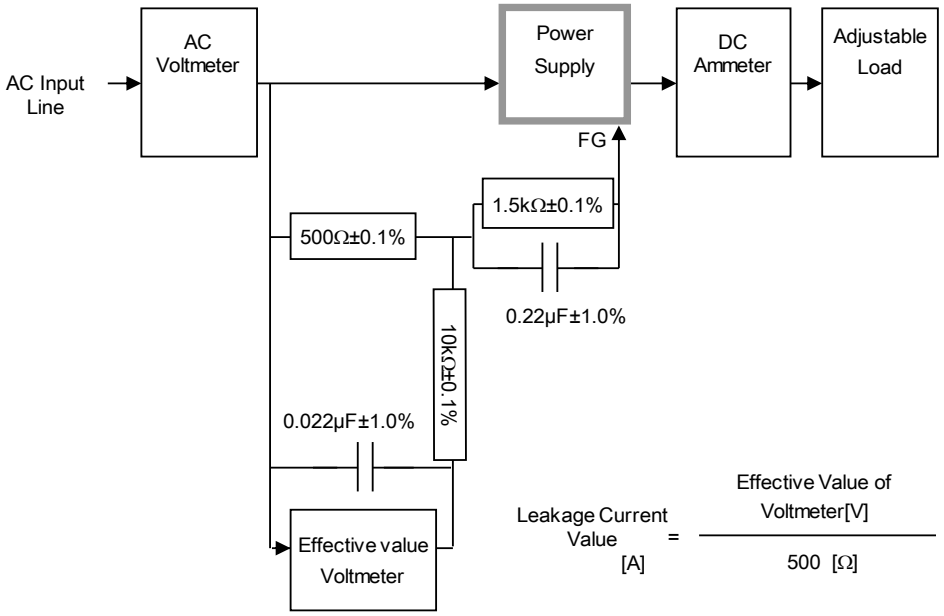

Figure C-2 (IEC62368-1 refer to IEC60990 Fig.4)

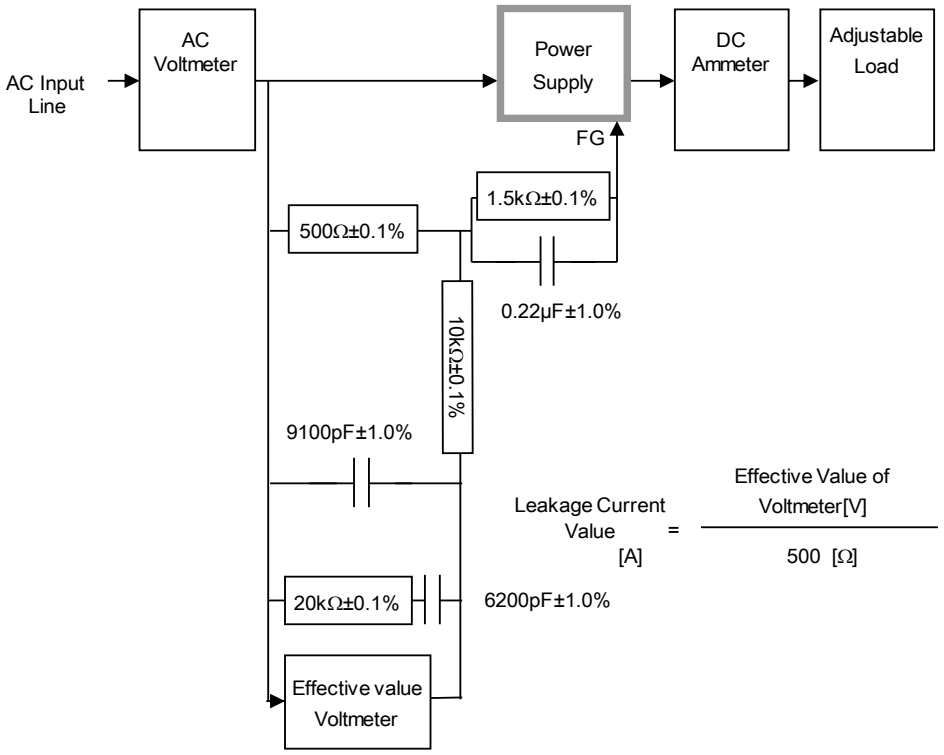

Figure C-3 (IEC62368-1 refer to IEC60990 Fig.5)