For Reference

TEST DATA OF MUS104805

Regulated DC Power Supply
July 2, 2025

Approved by : Kenichi Tsukada
Design Manager

Prepared by : Soichiro Kawaguchi
Design Engineer

COSEL CO.,LTD.

COSEL

CONTENTS

1.Input Current (by Load Current) · 1
2.Efficiency (by Load Current) · 2
3.Line Regulation · 3
4.Load Regulation · 4
5.Ripple-Noise · 4
6.Dynamic Load Response · 5
7.Rise and Fall Time · 6
8.Overcurrent Protection · 7
9.Ambient Temperature Drift · 8
10.Minimum Input Voltage for Regulated Output Voltage · · · · · · · · · · · 8
11.Figure of Testing Circuitry · 9
(Final Page 9)

COSEL

Model	MUS104805
Item	Input Current (by Load Current)
Object	————————

Temperature 25°C
Testing Circuitry Figure A

1.Graph

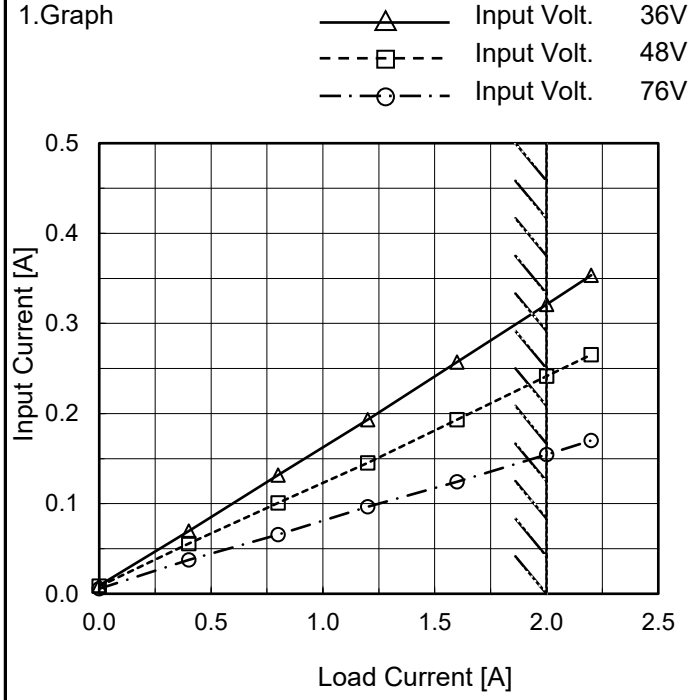

Note: Slanted line shows the range of the rated load current.

2.Values

Load Current [A]	Input Current [A]		
	Input Volt. 36[V]	Input Volt. 48[V]	Input Volt. 76[V]
0.0	0.009	0.008	0.006
0.4	0.070	0.056	0.038
0.8	0.132	0.101	0.066
1.2	0.193	0.145	0.097
1.6	0.257	0.193	0.124
2.0	0.321	0.241	0.155
2.2	0.354	0.265	0.170
--	-	-	-
--	-	-	-
--	-	-	-
--	-	-	-

COSEL

Model	MUS104805
Item	Efficiency (by Load Current)
Object	————————

Temperature 25°C
Testing Circuitry Figure A

1.Graph

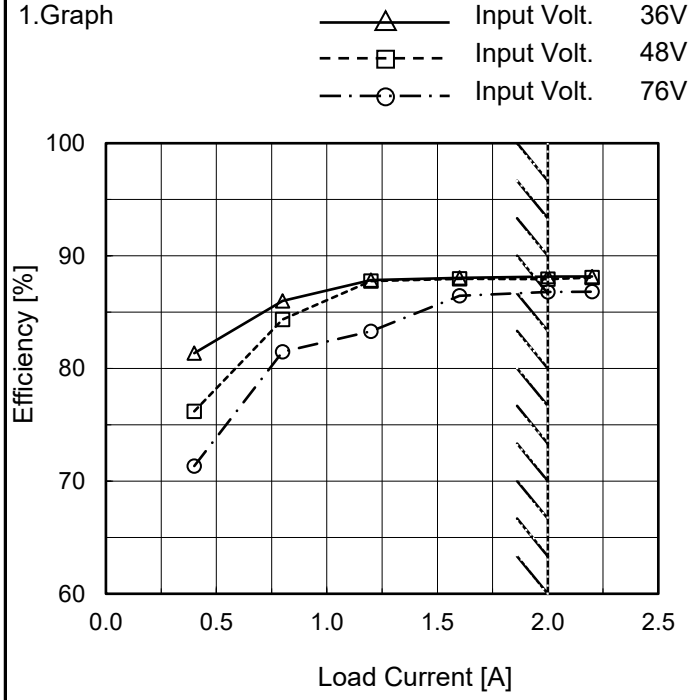

Note: Slanted line shows the range of the rated load current.

2.Values

Load Current [A]	Efficiency [%]		
	Input Volt. 36[V]	Input Volt. 48[V]	Input Volt. 76[V]
0.0	-	-	-
0.4	81.4	76.2	71.3
0.8	86.0	84.4	81.5
1.2	87.9	87.8	83.3
1.6	88.0	88.0	86.5
2.0	88.2	87.9	86.8
2.2	88.2	88.1	86.8
--	-	-	-
--	-	-	-
--	-	-	-
--	-	-	-

COSEL

Model	MUS104805
Item	Line Regulation
Object	+5V2A

Temperature 25°C
Testing Circuitry Figure A

1.Graph

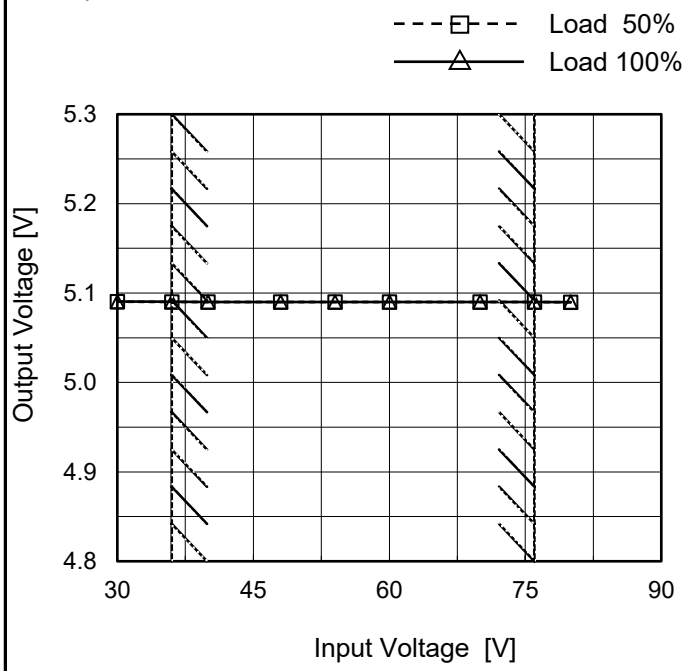

Note: Slanted line shows the range of the rated input voltage.

2.Values

Input Voltage [V]	Output Voltage [V]	
	Load 50%	Load 100%
30	5.090	5.091
36	5.090	5.090
40	5.090	5.090
48	5.090	5.090
54	5.090	5.090
60	5.090	5.090
70	5.090	5.090
76	5.090	5.090
80	5.090	5.090

COSEL

Model	MUS104805
Item	Load Regulation
Object	+5V2A

Temperature 25°C
Testing Circuitry Figure A

1.Graph

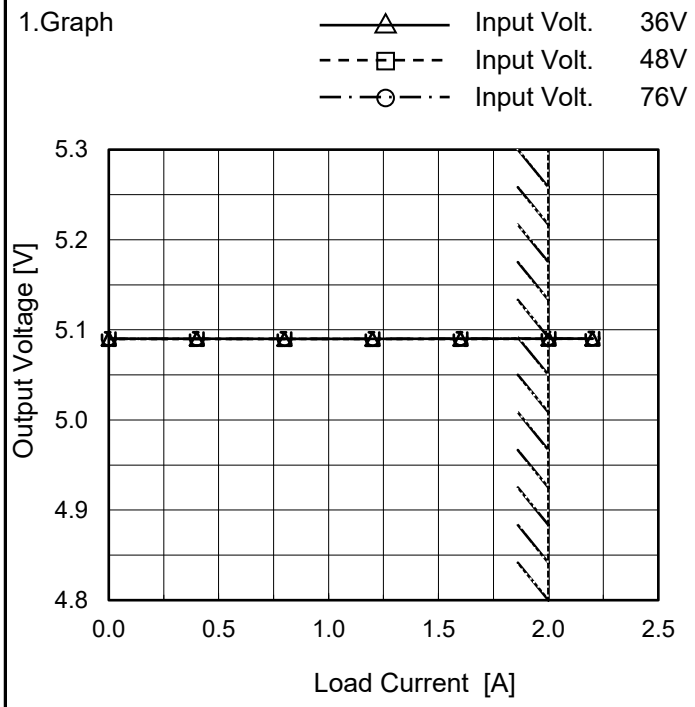

Note: Slanted line shows the range of the rated load current.

2.Values

Load Current [A]	Output Voltage [V]		
	Input Volt. 36[V]	Input Volt. 48[V]	Input Volt. 76[V]
0.0	5.090	5.090	5.090
0.4	5.090	5.090	5.090
0.8	5.090	5.090	5.090
1.2	5.090	5.090	5.090
1.6	5.090	5.090	5.090
2.0	5.090	5.090	5.090
2.2	5.090	5.090	5.090
--	--	--	--
--	--	--	--
--	--	--	--
--	--	--	--

Item	Ripple-Noise
Object	+5V2A

Temperature 25°C
Testing Circuitry Figure B

1.Graph

Input Voltage 48V
Load 100%

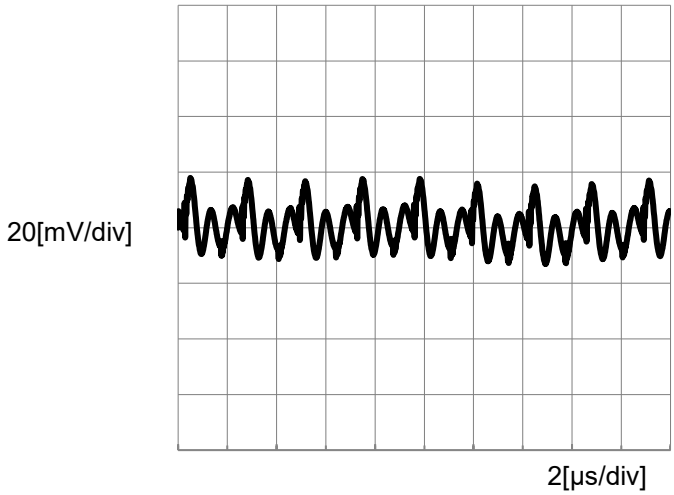

BC-12135

COSEL

Model	MUS104805	
Item	Dynamic Load Response	Temperature 25°C Testing Circuitry Figure A
Object	+5V2A	

Input Volt. 48 V

Cycle 1000 ms

Response. t1=t2=50µs. Typ

Load 0%(0A) ←→
Load 100%(2A)

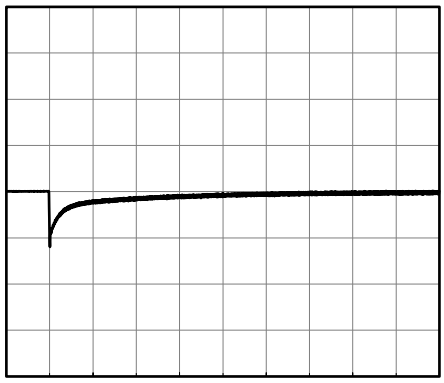

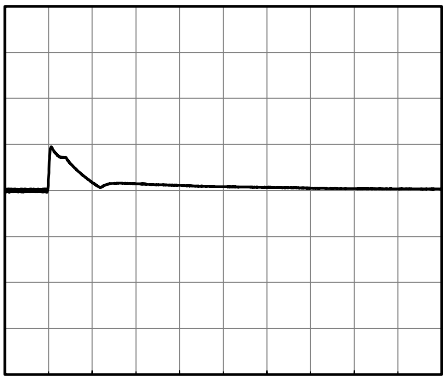

200[mV/div]

1[ms/div]

1[ms/div]

Load 50%(1A) ←→
Load 100%(2A)

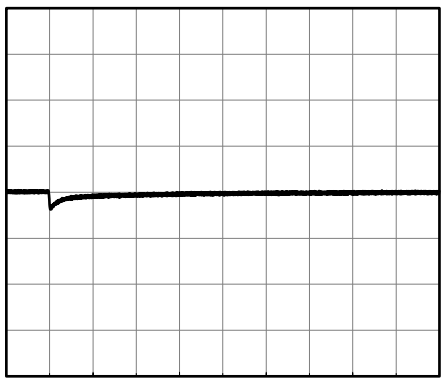

200[mV/div]

1[ms/div]

1[ms/div]

COSEL

Model	MUS104805	
Item	Rise and Fall Time	Temperature 25°C Testing Circuitry Figure A
Object	+5V2A	

1.Graph

Input Volt. 48 V

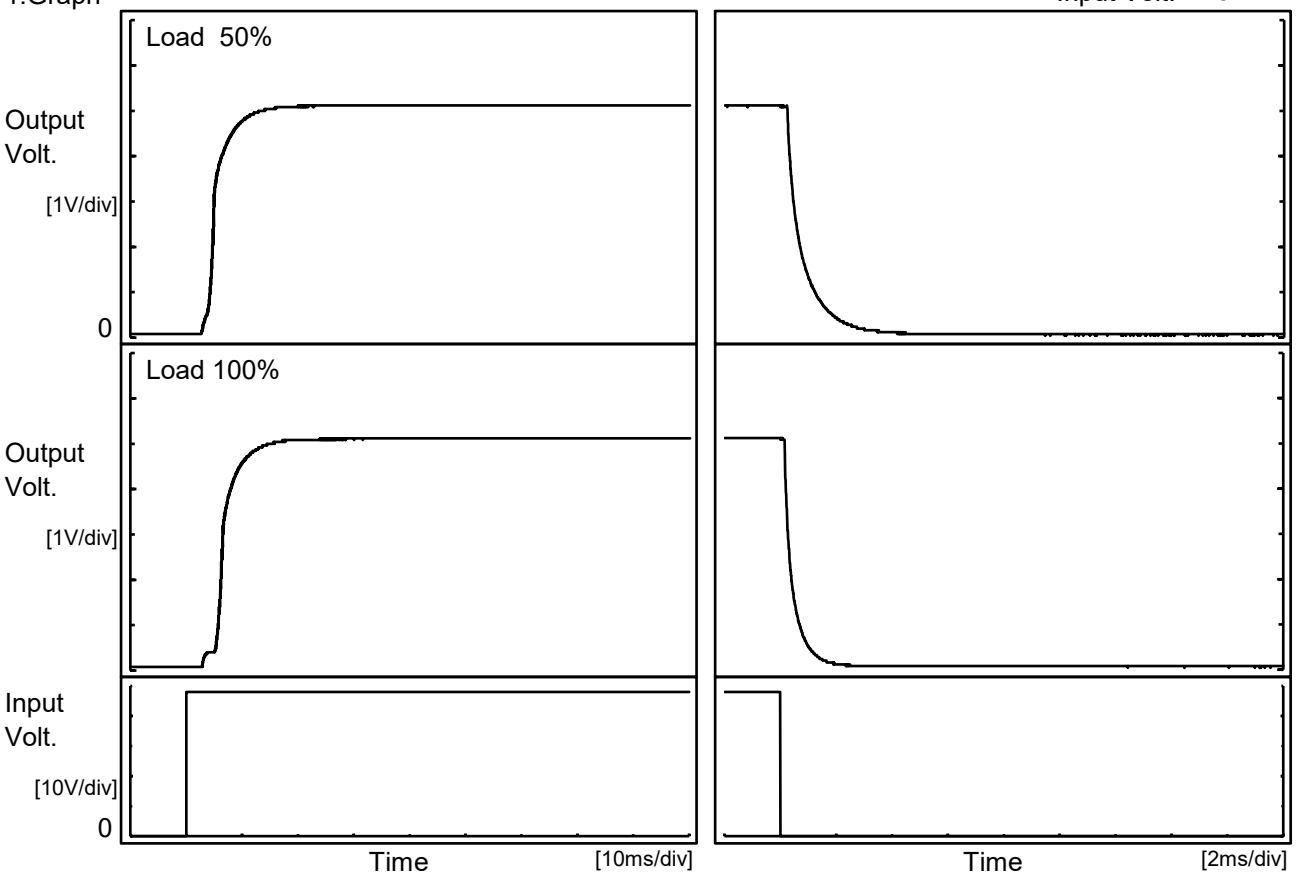

2.Values

[ms]

Load \ Time	Td	Tr	Ts	Th	Tf
50 %	3.8	4.6	8.4	0.3	1.5
100 %	5.3	4.5	9.8	0.2	0.8

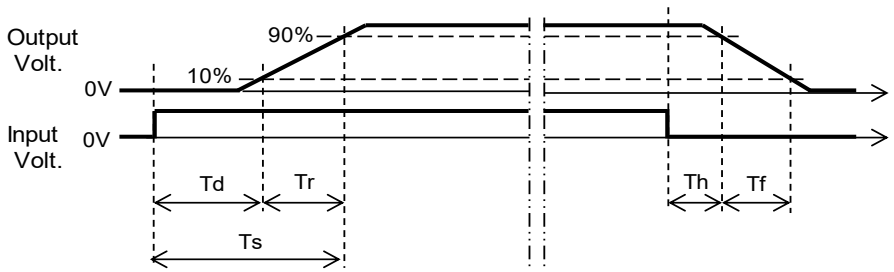

COSEL

Model	MUS104805
Item	Overcurrent Protection
Object	+5V2A

Temperature 25°C
Testing Circuitry Figure A

1.Graph

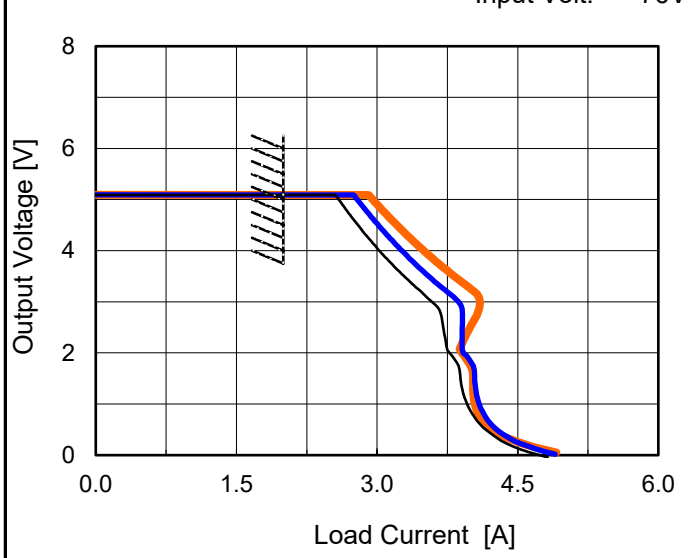

Note: Slanted line shows the range of the rated load current.

2.Values

Output Voltage [V]	Load Current [A]		
	Input Volt. 36[V]	Input Volt. 48[V]	Input Volt. 76[V]
4.75	2.70	2.90	3.09
4.50	2.80	3.02	3.21
4.00	3.03	3.27	3.51
3.50	3.30	3.56	3.85
3.00	3.59	3.87	4.10
2.50	3.71	3.91	3.96
2.00	3.77	3.92	3.93
1.50	3.89	4.04	4.02
1.00	3.97	4.11	4.04
0.50	4.18	4.30	4.26
0.00	4.82	5.01	5.15
--	-	-	-

COSEL

Model	MUS104805	
Item	Ambient Temperature Drift	Testing Circuitry Figure A
Object	+5V2A	

1.Values

Load 100%

Ambient Temperature[℃]	Output Voltage [V]		
	Input Volt. 36V	Input Volt. 48V	Input Volt. 76V
-40	5.056	5.056	5.056
25	5.090	5.090	5.090
85	5.096	5.096	5.096

Item	Minimum Input Voltage for Regulated Output Voltage	Testing Circuitry Figure A
Object	+5V2A	

1.Values

Ambient Temperature[℃]	Input Voltage [V]	
	Load 50%	Load 100%
-40	28.4	28.4
25	28.4	28.5
85	28.5	28.5

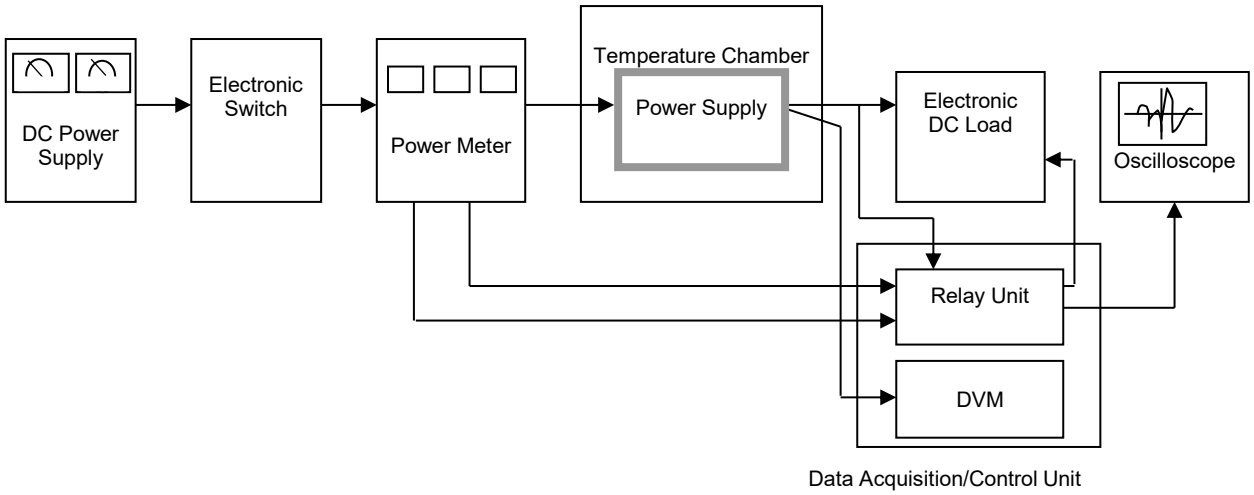

Figure A

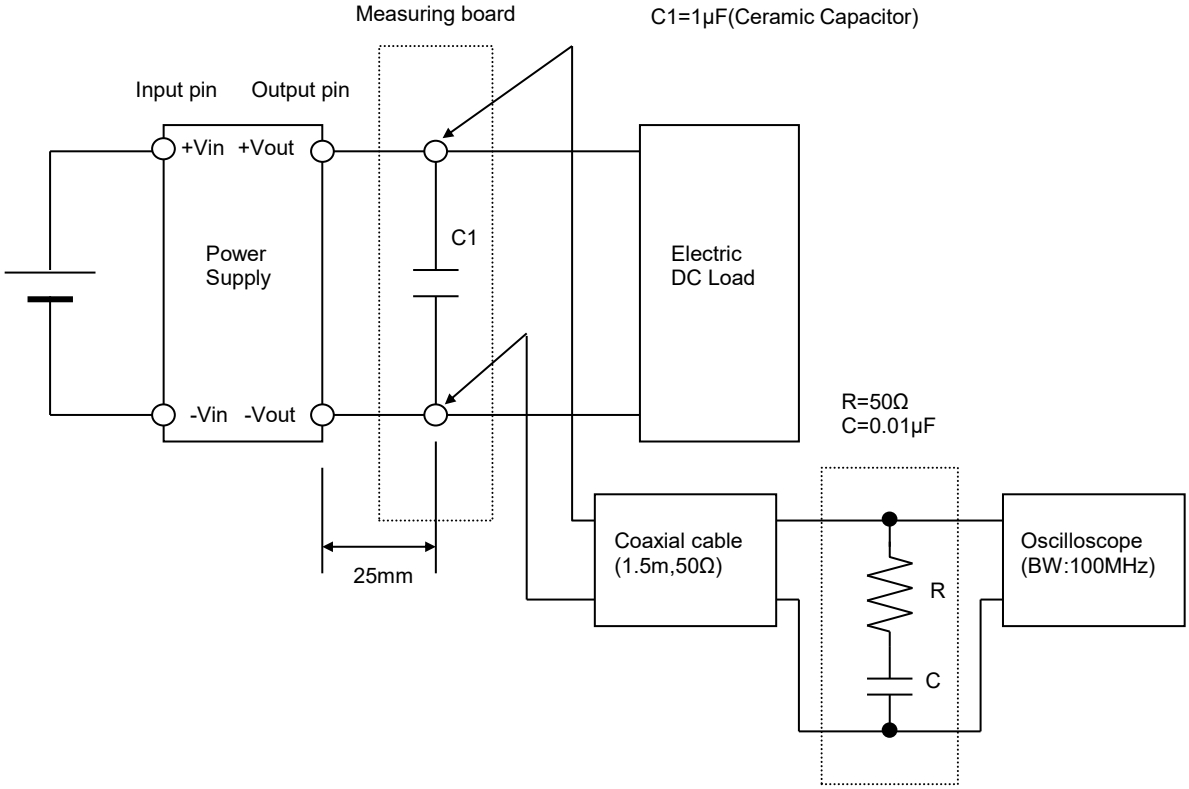

Figure B