For Reference

TEST DATA OF PDA300F-15

Regulated DC Power Supply
May 29, 2025

Approved by : Yoshiaki Shimizu
Design Manager

Prepared by : Terumasa Araki
Design Engineer

COSEL CO.,LTD.

COSEL

CONTENTS

1.Input Current (by Load Current) · 1
2.Efficiency (by Load Current) · 2
3.Power Factor (by Load Current) · 3
4.Inrush Current · 4
5.Leakage Current · 5
6.Line Regulation · 6
7.Load Regulation · 7
8.Ripple-Noise · 7
9.Dynamic Load Response · 8
10.Rise and Fall Time · 9
11.Hold-Up Time · 10
12.Instantaneous Interruption Compensation · · · · · · · · · · · · · · · · · 11
13.Overcurrent Protection · 12
14.Ambient Temperature Drift · 13
15.Minimum Input Voltage for Regulated Output Voltage · · · · · · · · · · 13
16.Overvoltage Protection · 13
17.Figure of Testing Circuitry · 14
(Final Page 15)

COSEL

Model	PDA300F-15
Item	Input Current (by Load Current)
Object	――――――

Temperature 25°C
Testing Circuitry Figure A

1.Graph

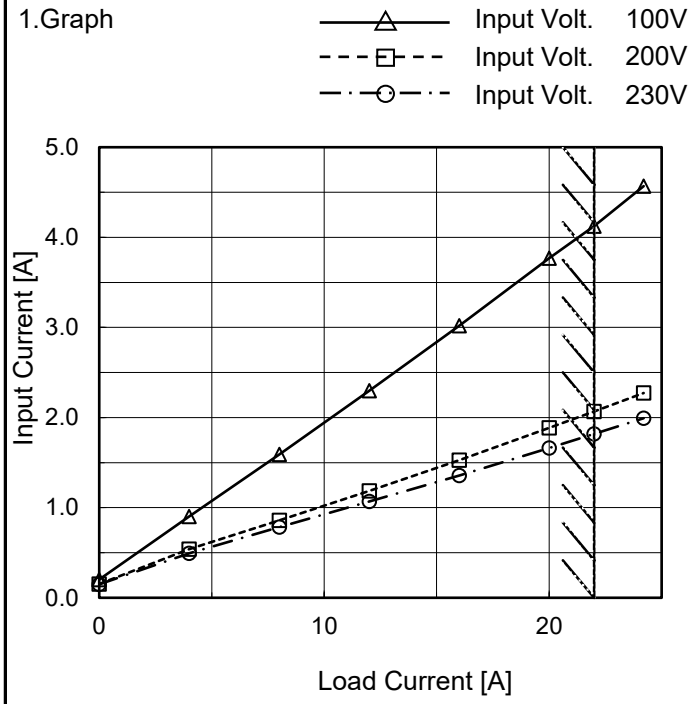

Note: Slanted line shows the range of the rated load current.

2.Values

Load Current [A]	Input Current [A]		
	Input Volt. 100[V]	Input Volt. 200[V]	Input Volt. 230[V]
0.0	0.203	0.153	0.149
4.0	0.903	0.540	0.493
8.0	1.591	0.858	0.785
12.0	2.299	1.187	1.067
16.0	3.019	1.528	1.357
20.0	3.768	1.885	1.661
22.0	4.125	2.069	1.817
24.2	4.568	2.272	1.993
--	-	-	-
--	-	-	-
--	-	-	-

BC-12162

COSEL

Model	PDA300F-15
Item	Efficiency (by Load Current)
Object	————————

Temperature 25°C
Testing Circuitry Figure A

1.Graph

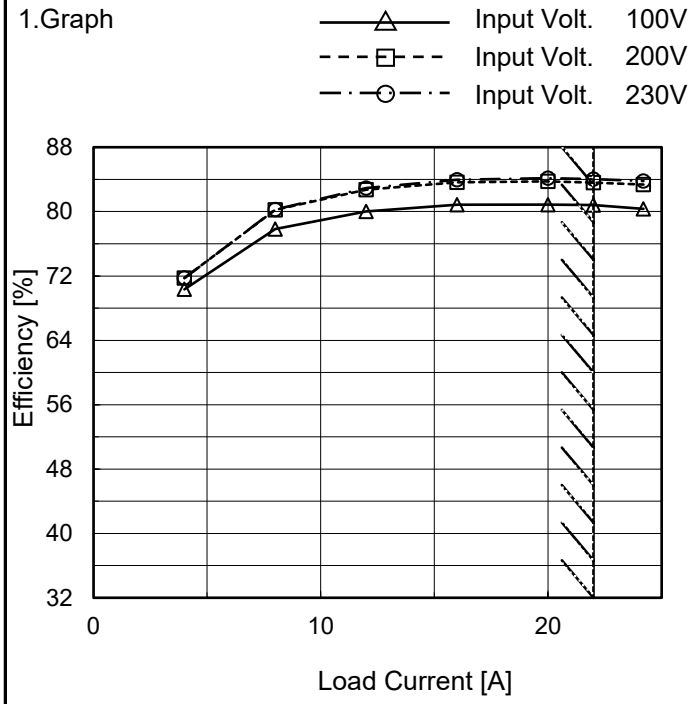

Note: Slanted line shows the range of the rated load current.

2.Values

Load Current [A]	Efficiency [%]		
	Input Volt. 100[V]	Input Volt. 200[V]	Input Volt. 230[V]
0.0	-	-	-
4.0	70.3	71.8	71.7
8.0	77.8	80.2	80.2
12.0	80.0	82.7	82.9
16.0	80.8	83.7	84.0
20.0	80.9	83.8	84.2
22.0	80.8	83.6	84.1
24.2	80.3	83.3	83.8
--	-	-	-
--	-	-	-
--	-	-	-

COSEL

Model	PDA300F-15
Item	Power Factor (by Load Current)
Object	————————

Temperature 25°C
Testing Circuitry Figure A

1.Graph

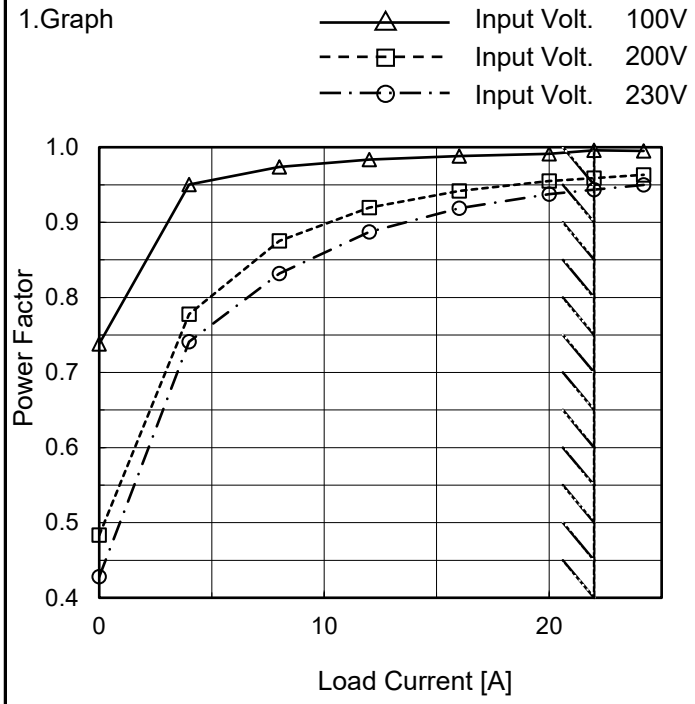

Note: Slanted line shows the range of the rated load current.

2.Values

Load Current [A]	Power Factor		
	Input Volt. 100[V]	Input Volt. 200[V]	Input Volt. 230[V]
0.0	0.738	0.483	0.428
4.0	0.950	0.778	0.741
8.0	0.974	0.875	0.832
12.0	0.984	0.920	0.887
16.0	0.988	0.942	0.919
20.0	0.991	0.955	0.938
22.0	0.996	0.959	0.944
24.2	0.995	0.963	0.950
--	-	-	-
--	-	-	-
--	-	-	-

COSEL

Model	PDA300F-15	
Item	Inrush Current	Temperature 25°C Testing Circuitry Figure A
Object	————————	

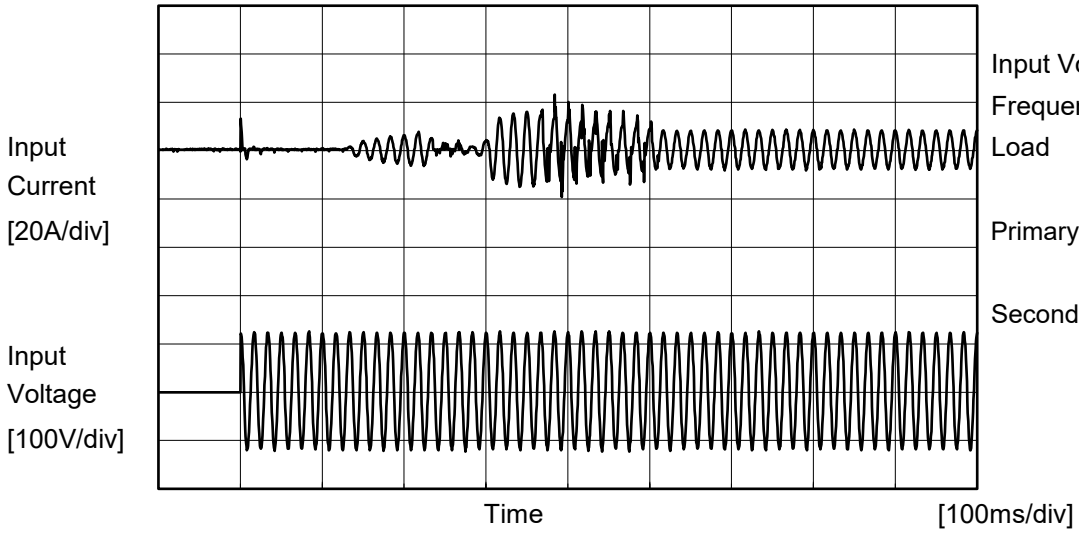

Input Voltage 100 V
Frequency 60 Hz
Load 100 %

Primary inrush current : 13.2 A
Secondary inrush current : 23.2 A

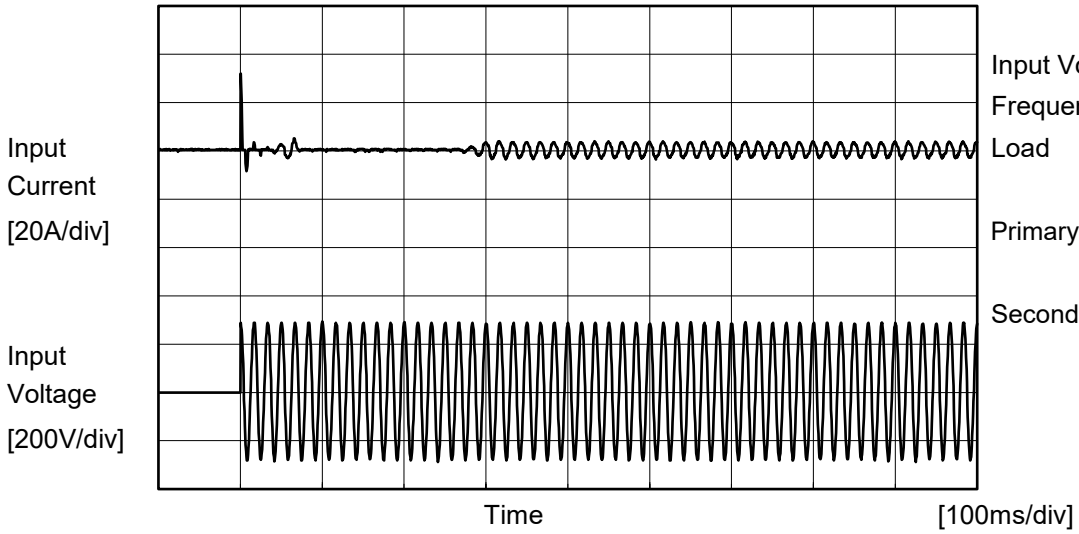

Input Voltage 230 V
Frequency 60 Hz
Load 100 %

Primary inrush current : 32.0 A
Secondary inrush current : 8.4 A

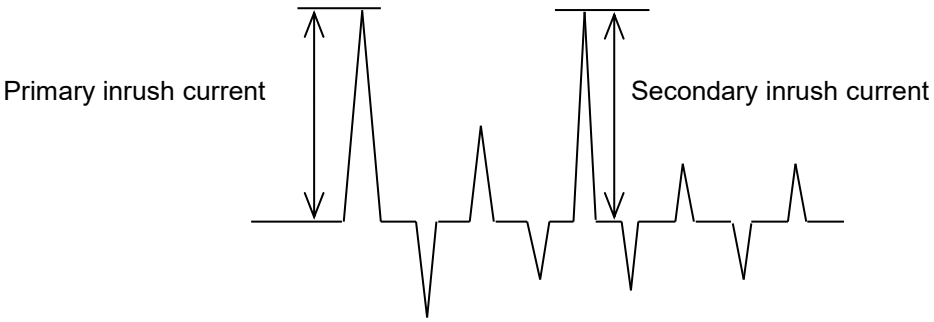

COSEL

Model	PDA300F-15	
Item	Leakage Current	Temperature 25°C Testing Circuitry Figure C
Object	――――――――――――	

1.Results

[mA]

Standards	Testing Circuitry	Measuring Method	Input Volt.			Note
			100 [V]	230 [V]	240 [V]	
DEN-AN	Figure C-1	Both phases	0.19	0.38	0.37	Operation
		One of phases	0.29	0.68	0.71	Stand by
IEC62368-1	Figure C-2	Both phases	0.14	0.35	0.37	Operation
		One of phases	0.26	0.67	0.70	Stand by
	Figure C-3	Both phases	0.14	0.35	0.37	Operation
		One of phases	0.26	0.66	0.69	Stand by

The value for "One of phases" is the reference value only.

2.Condition

Leakage current value is concluded after measuring both phases of AC input and by choosing the larger one.

COSEL

Model	PDA300F-15
Item	Line Regulation
Object	+15V22A

Temperature 25°C
Testing Circuitry Figure A

1.Graph

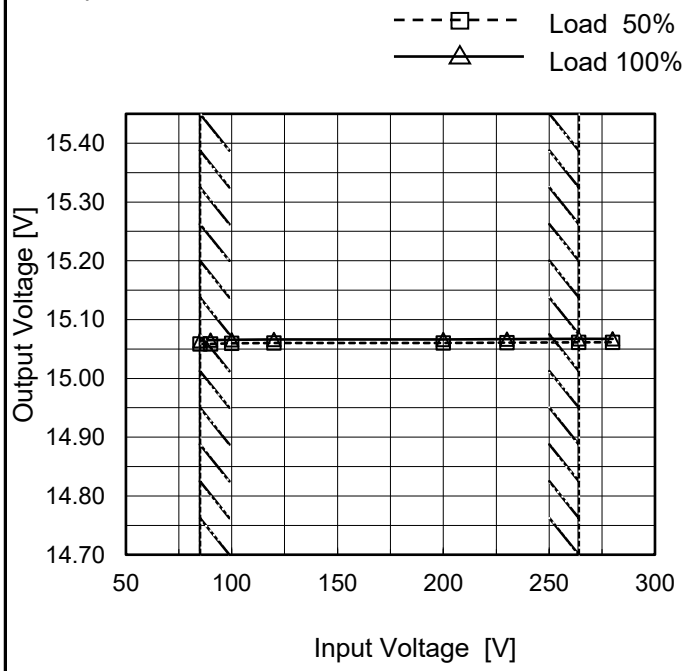

Note: Slanted line shows the range of the rated input voltage.

2.Values

Input Voltage [V]	Output Voltage [V]	
	Load 50%	Load 100%
85	15.059	15.064
90	15.059	15.065
100	15.060	15.066
120	15.060	15.066
200	15.060	15.066
230	15.061	15.067
264	15.061	15.067
280	15.061	15.067
--	-	-

COSEL

Model	PDA300F-15
Item	Load Regulation
Object	+15V22A

Temperature 25°C
Testing Circuitry Figure A

1.Graph

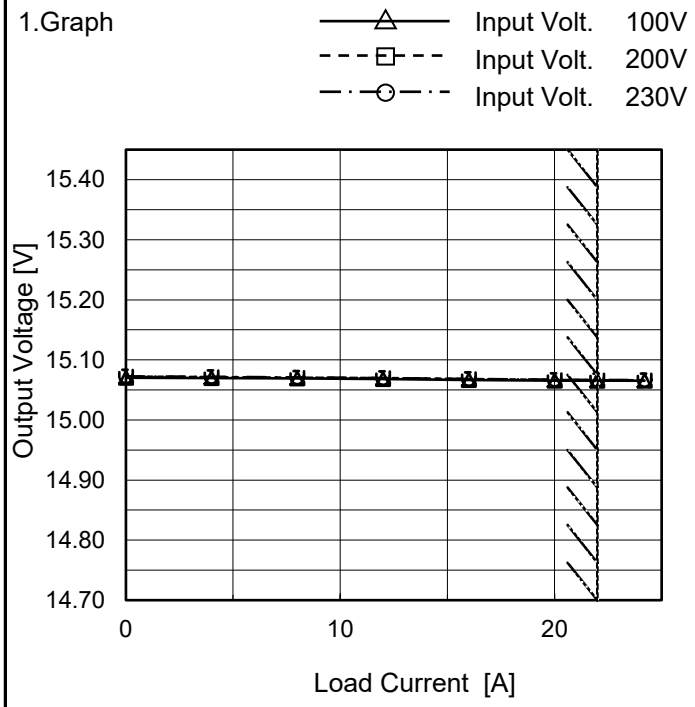

Note: Slanted line shows the range of the rated load current.

2.Values

Load Current [A]	Output Voltage [V]		
	Input Volt. 100[V]	Input Volt. 200[V]	Input Volt. 230[V]
0.0	15.070	15.072	15.073
4.0	15.070	15.071	15.072
8.0	15.069	15.070	15.071
12.0	15.068	15.070	15.070
16.0	15.067	15.068	15.068
20.0	15.066	15.067	15.067
22.0	15.066	15.066	15.067
24.2	15.065	15.066	15.066
--	--	--	--
--	--	--	--
--	--	--	--

Item	Ripple-Noise
Object	+15V22A

Temperature 25°C
Testing Circuitry Figure B

1.Graph

Input Voltage 230V
Load 100%

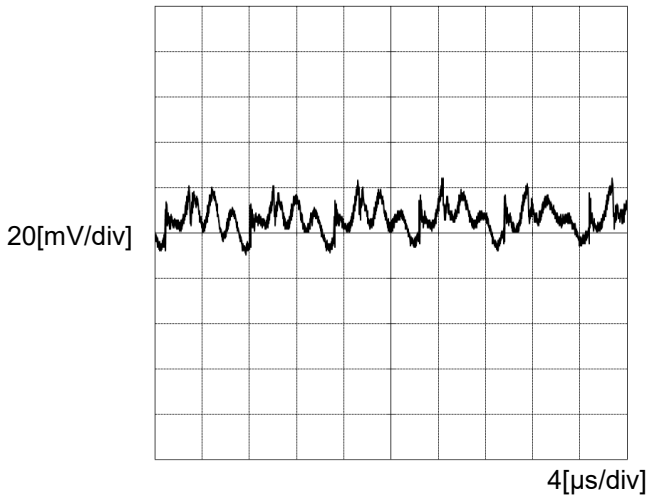

COSEL

Model	PDA300F-15	
Item	Dynamic Load Response	Temperature 25°C Testing Circuitry Figure A
Object	+15V22A	

Input Volt. 230 V

Cycle 1000 ms

Response. t1=t2=50µs. Typ

Load Current

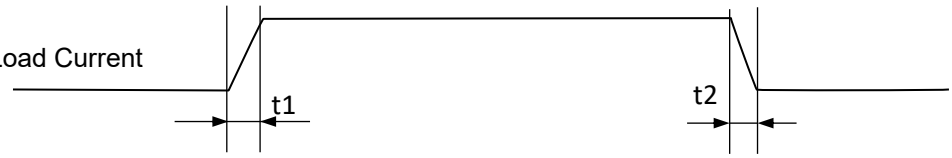

Load 0%(0A) ←→
Load 100%(22A)

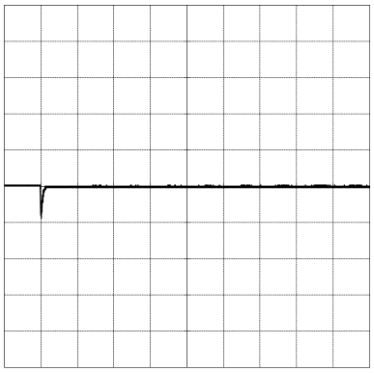

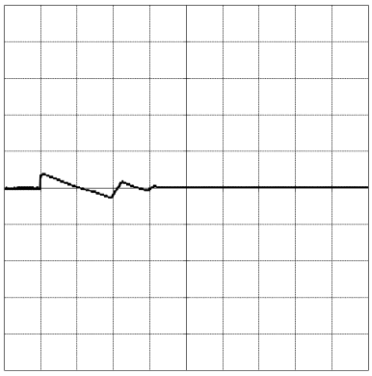

500[mV/div]

10[ms/div]

10[ms/div]

Load 50%(11A) ←→
Load 100%(22A)

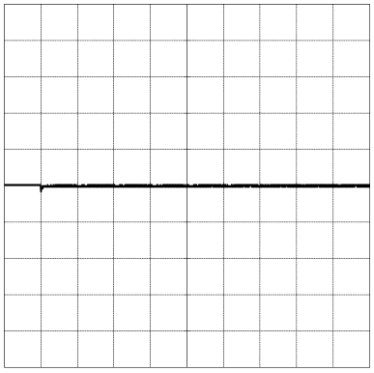

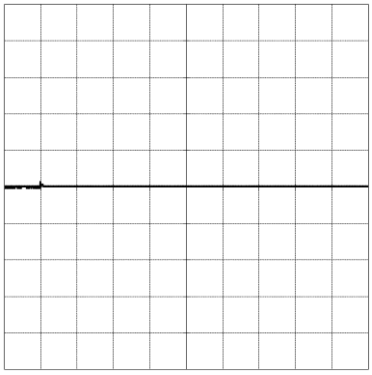

500[mV/div]

10[ms/div]

10[ms/div]

Load %(0A) ←→
Load 50%(11A)

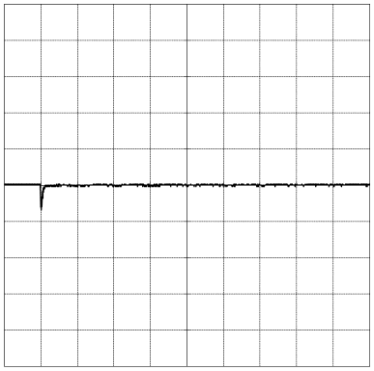

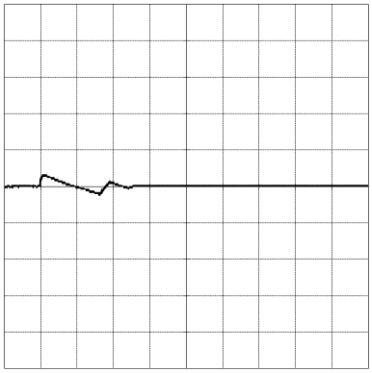

500[mV/div]

10[ms/div]

10[ms/div]

COSEL

Model	PDA300F-15	
Item	Rise and Fall Time	Temperature 25°C Testing Circuitry Figure A
Object	+15V22A	

1.Graph

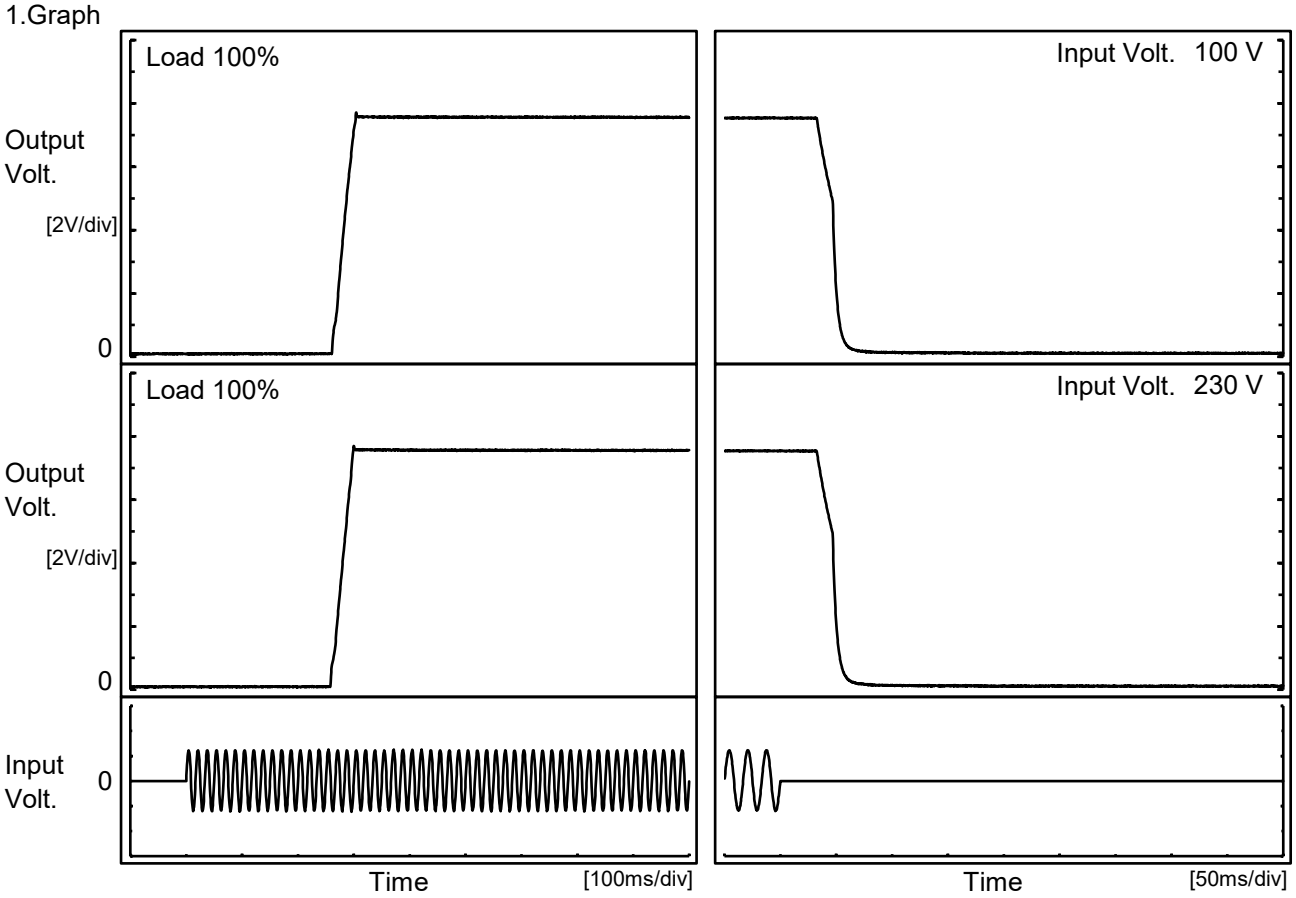

2.Values

[ms]

Input Volt. \ Time	Td	Tr	Ts	Th	Tf
100 V	264.0	34.0	298.0	36.0	18.3
230 V	261.0	34.5	295.5	36.0	18.3

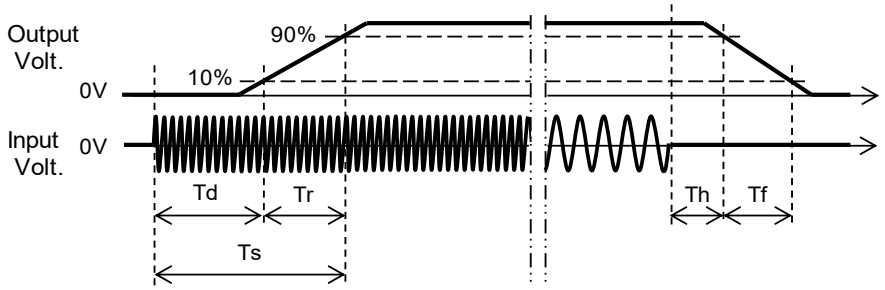

COSEL

Model	PDA300F-15
Item	Hold-Up Time
Object	+15V22A

Temperature 25°C
Testing Circuitry Figure A

1.Graph

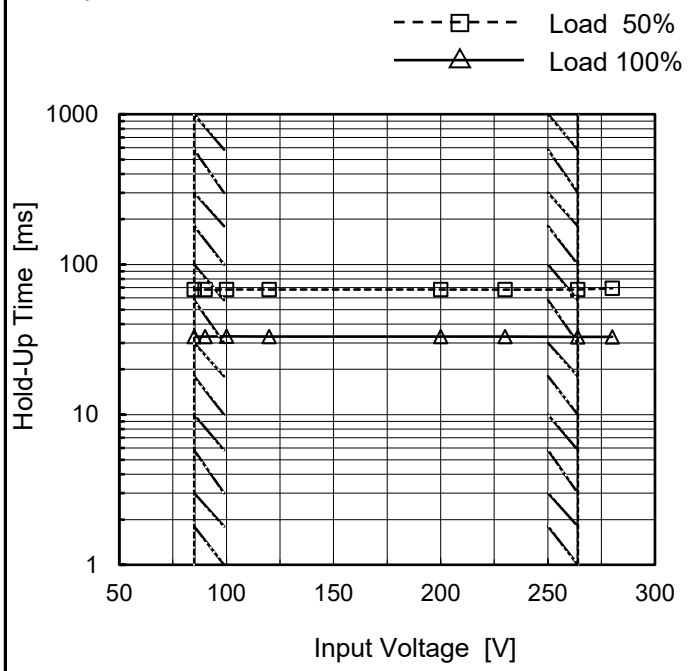

This duration covers from Shut-off of input voltage to the moment when output voltage descends to the rated range of voltage accuracy.
Note: Slanted line shows the range of the rated input voltage.

2.Values

Input Voltage [V]	Hold-Up Time [ms]	
	Load 50%	Load 100%
85	68	33
90	68	33
100	68	33
120	68	33
200	68	33
230	68	33
264	68	33
280	69	33
--	-	-

BC-12162

COSEL

Model	PDA300F-15
Item	Instantaneous Interruption Compensation
Object	+15V22A

Temperature 25°C
Testing Circuitry Figure A

1.Graph

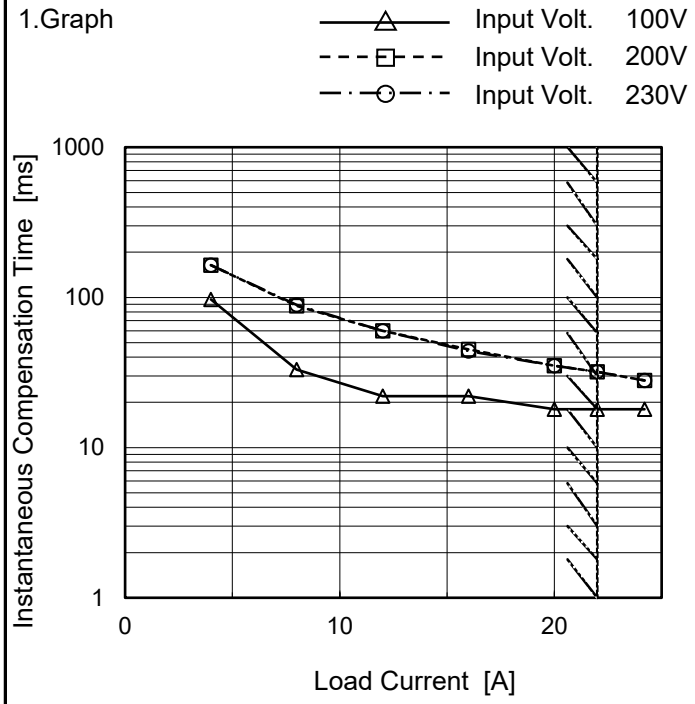

Note: Slanted line shows the range of the rated load current.

2.Values

Load Current [A]	Time [ms]		
	Input Volt. 100[V]	Input Volt. 200[V]	Input Volt. 230[V]
0.0	-	-	-
4.0	97	164	164
8.0	33	88	89
12.0	22	60	60
16.0	22	45	44
20.0	18	35	35
22.0	18	32	32
24.2	18	28	28
--	-	-	-
--	-	-	-
--	-	-	-

COSEL

Model	PDA300F-15
Item	Overcurrent Protection
Object	+15V22A

Temperature 25°C
Testing Circuitry Figure A

1.Graph

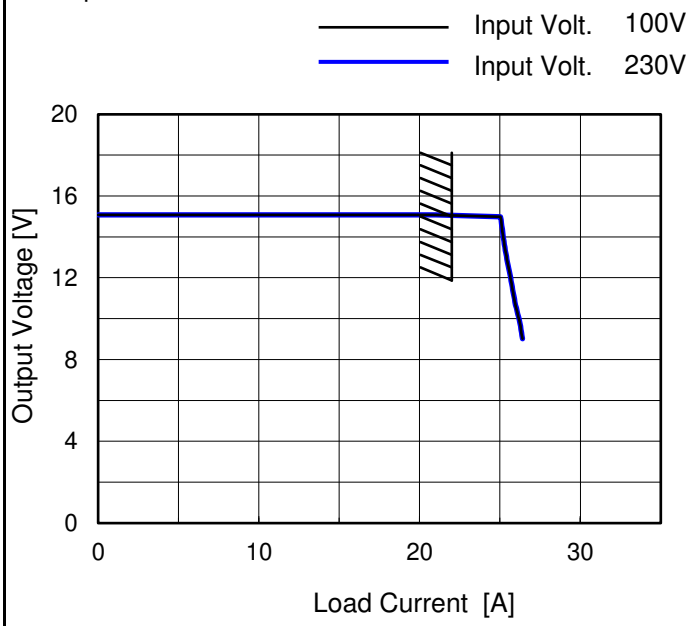

Note: Slanted line shows the range of the rated load current.

Intermittent operation occurs when the output voltage is from 9.00V to 0V.

2.Values

Output Voltage [V]	Load Current [A]	
	Input Volt. 100[V]	Input Volt. 230[V]
14.25	25.16	25.18
13.50	25.27	25.28
12.00	25.65	25.66
10.50	26.02	26.03
9.00	26.40	26.41
--	-	-
--	-	-
--	-	-
--	-	-
--	-	-
--	-	-
--	-	-

COSEL

Model	PDA300F-15
Item	Ambient Temperature Drift
Object	+15V22A

Testing Circuitry Figure A

1.Values

Load 100%

Ambient Temperature[℃]	Output Voltage [V]		
	Input Volt. 100V	Input Volt. 200V	Input Volt. 230V
-20	15.006	15.006	15.007
25	15.075	15.076	15.077
50	15.086	15.086	15.097

Item	Minimum Input Voltage for Regulated Output Voltage
Object	+15V22A

Testing Circuitry Figure A

1.Values

Ambient Temperature[℃]	Input Voltage [V]	
	Load 50%	Load 100%
-20	69	67
25	69	67
50	69	67

Item	Overvoltage Protection
Object	+15V22A

Testing Circuitry Figure A

1.Values

Load 0%

Ambient Temperature[℃]	Operating Point [V]	
	Input Volt. 100V	Input Volt. 230V
-20	21.45	21.45
25	21.56	21.56
50	21.56	21.56

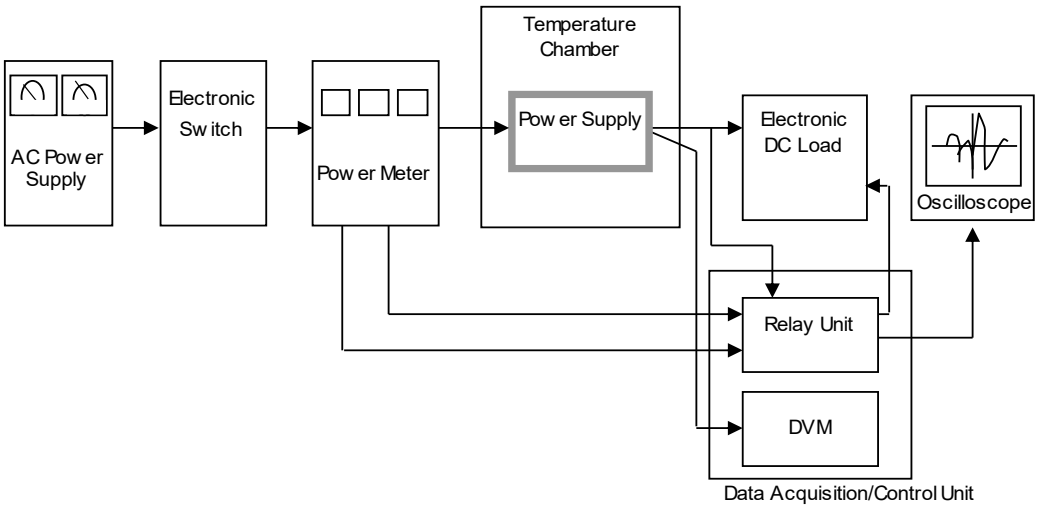

Figure A

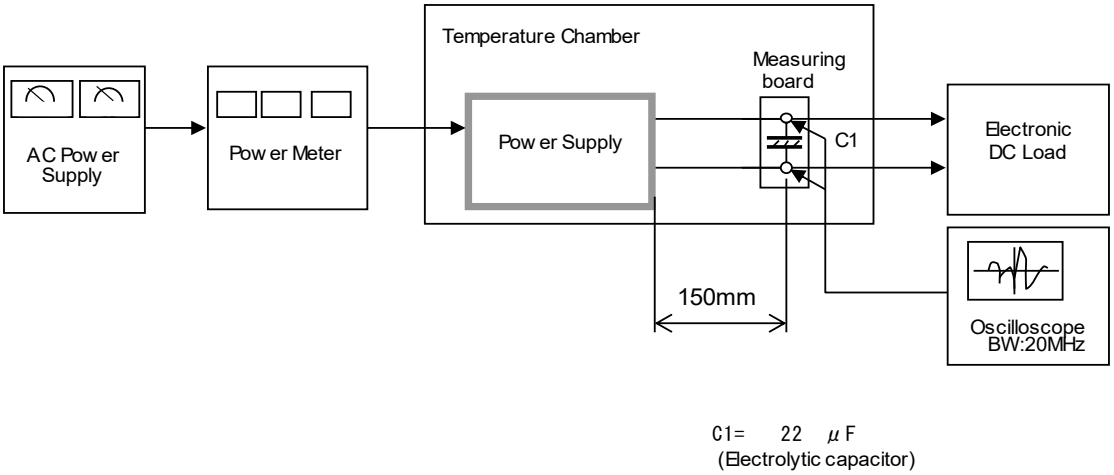

Figure B

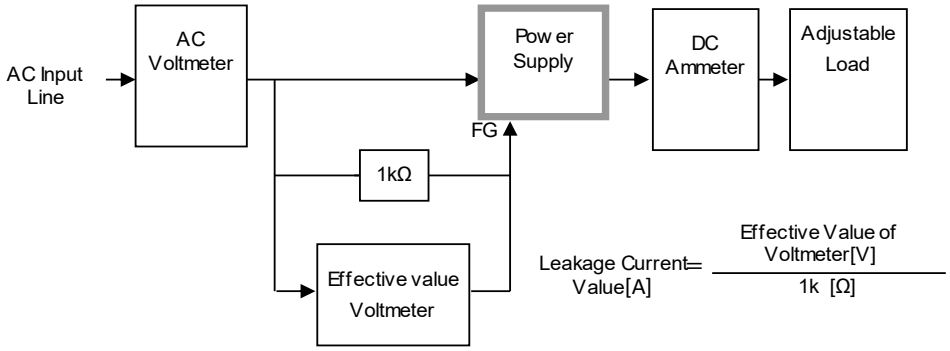

Figure C-1 (DEN-AN)

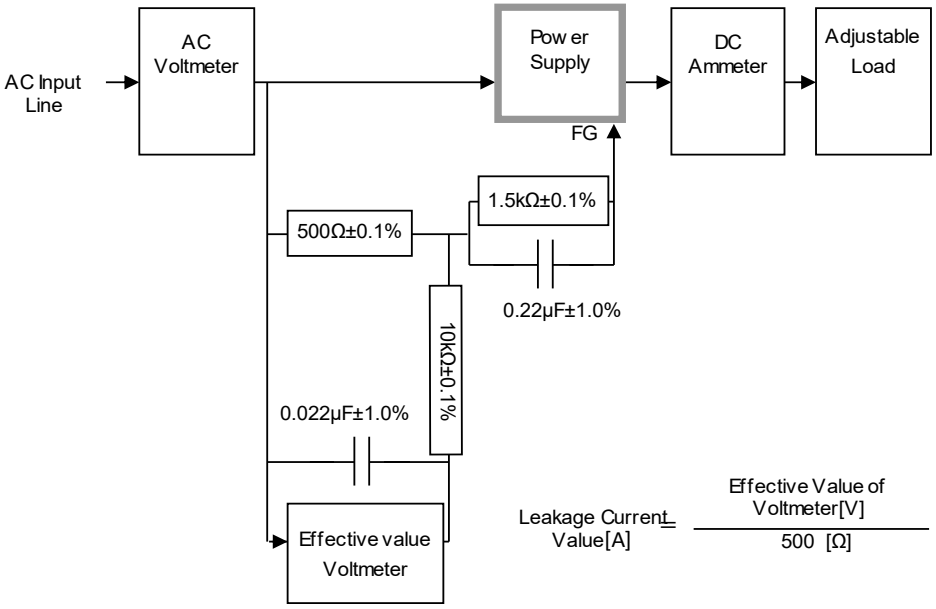

Figure C-2 (IEC62368-1 refer to IEC60990 Fig.4)

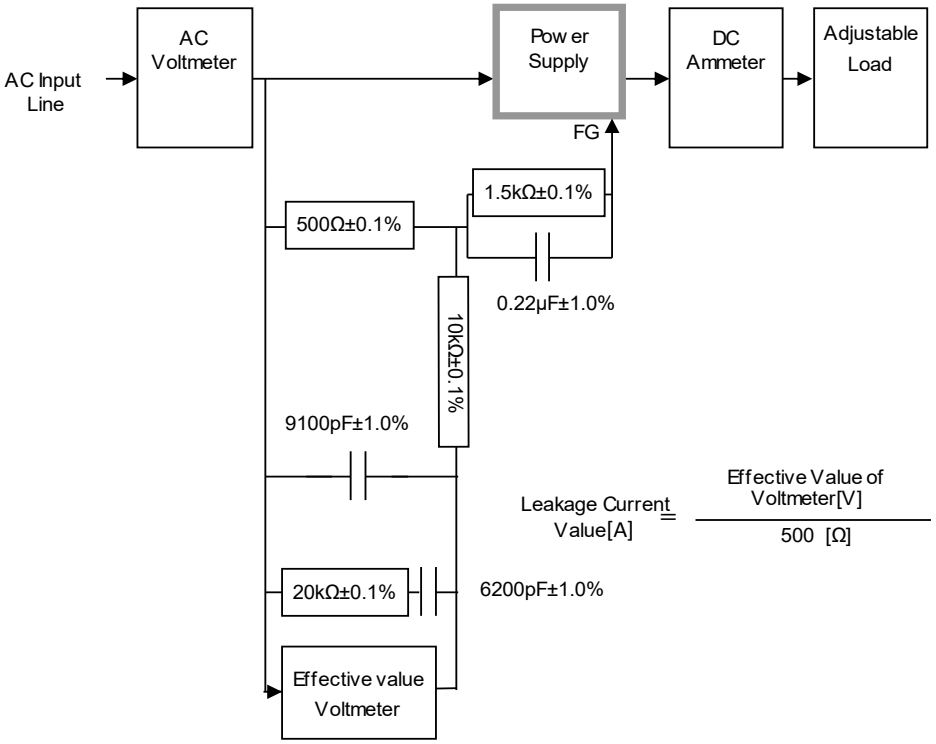

Figure C-3 (IEC62368-1 refer to IEC60990 Fig.5)