For Reference

TEST DATA OF PDA300F-36

Regulated DC Power Supply
May 30, 2025

Approved by : Yoshiaki Shimizu
Design Manager

Prepared by : Terumasa Araki
Design Engineer

COSEL CO.,LTD.

COSEL

CONTENTS

1.Input Current (by Load Current) · 1
2.Efficiency (by Load Current) · 2
3.Power Factor (by Load Current) · 3
4.Inrush Current · 4
5.Leakage Current · 5
6.Line Regulation · 6
7.Load Regulation · 7
8.Ripple-Noise · 7
9.Dynamic Load Response · 8
10.Rise and Fall Time · 9
11.Hold-Up Time · 10
12.Instantaneous Interruption Compensation · · · · · · · · · · · · · · · · · 11
13.Overcurrent Protection · 12
14.Ambient Temperature Drift · 13
15.Minimum Input Voltage for Regulated Output Voltage · · · · · · · · · · 13
16.Overvoltage Protection · 13
17.Figure of Testing Circuitry · 14
(Final Page 15)

COSEL

Model	PDA300F-36
Item	Input Current (by Load Current)
Object	————————

Temperature 25°C
Testing Circuitry Figure A

1.Graph

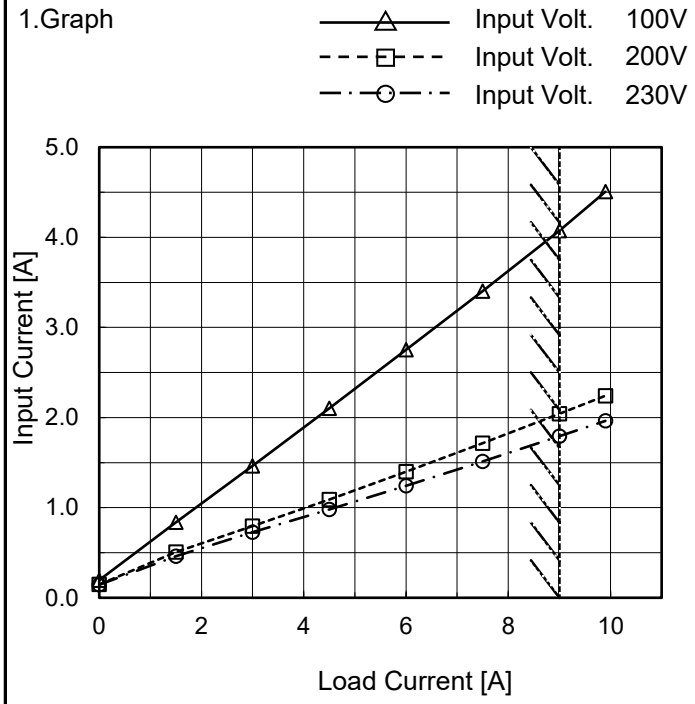

Note: Slanted line shows the range of the rated load current.

2.Values

Load Current [A]	Input Current [A]		
	Input Volt. 100[V]	Input Volt. 200[V]	Input Volt. 230[V]
0.0	0.196	0.147	0.144
1.5	0.837	0.507	0.463
3.0	1.464	0.794	0.727
4.5	2.103	1.090	0.981
6.0	2.752	1.398	1.241
7.5	3.404	1.716	1.511
9.0	4.076	2.044	1.792
9.9	4.506	2.242	1.963
--	-	-	-
--	-	-	-
--	-	-	-

BC-12164

COSEL

Model	PDA300F-36
Item	Efficiency (by Load Current)
Object	————————

Temperature 25°C
Testing Circuitry Figure A

1.Graph

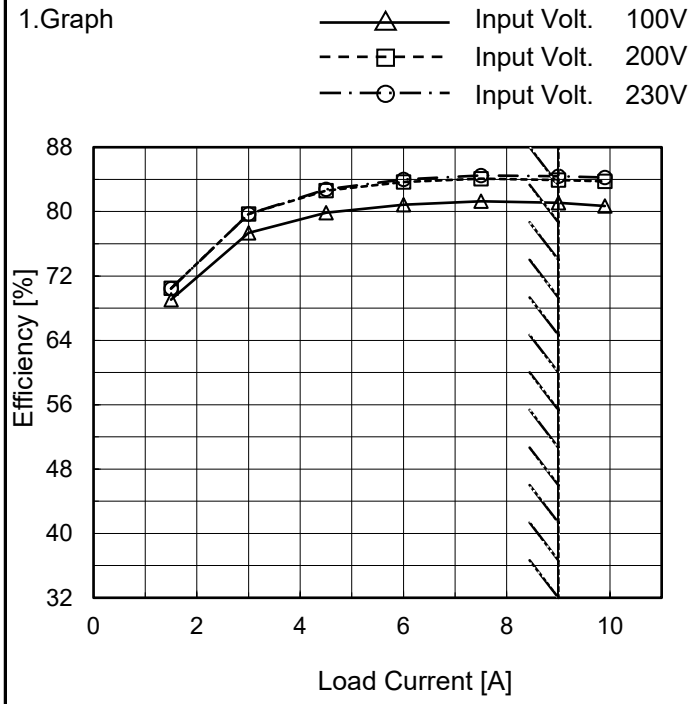

Note: Slanted line shows the range of the rated load current.

2.Values

Load Current [A]	Efficiency [%]		
	Input Volt. 100[V]	Input Volt. 200[V]	Input Volt. 230[V]
0.0	-	-	-
1.5	69.1	70.5	70.4
3.0	77.4	79.7	79.7
4.5	79.8	82.6	82.8
6.0	80.9	83.7	84.0
7.5	81.3	84.1	84.5
9.0	81.1	83.9	84.4
9.9	80.7	83.7	84.2
--	-	-	-
--	-	-	-
--	-	-	-

COSEL

Model	PDA300F-36
Item	Power Factor (by Load Current)
Object	————————

Temperature 25°C
Testing Circuitry Figure A

1.Graph

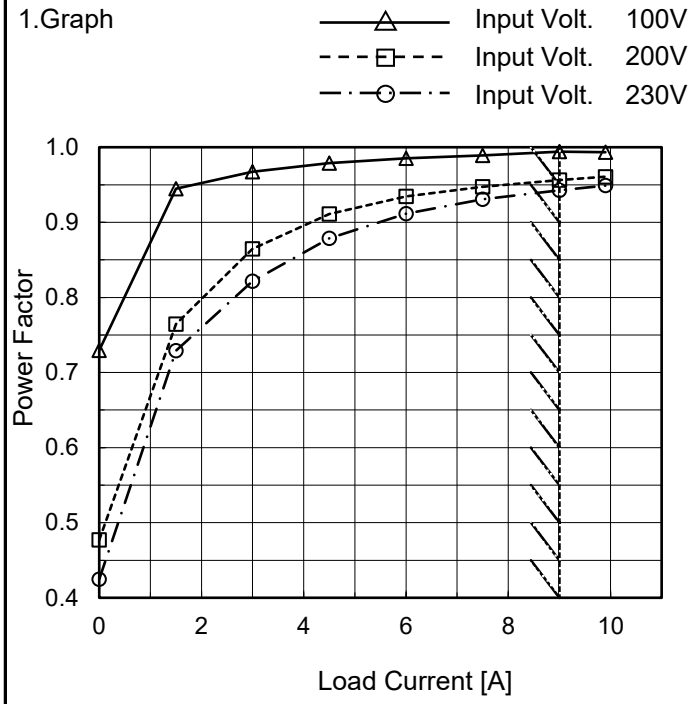

Note: Slanted line shows the range of the rated load current.

2.Values

Load Current [A]	Power Factor		
	Input Volt. 100[V]	Input Volt. 200[V]	Input Volt. 230[V]
0.0	0.730	0.477	0.425
1.5	0.945	0.765	0.729
3.0	0.967	0.865	0.821
4.5	0.979	0.911	0.879
6.0	0.985	0.934	0.912
7.5	0.989	0.947	0.931
9.0	0.994	0.956	0.943
9.9	0.994	0.961	0.949
--	-	-	-
--	-	-	-
--	-	-	-

COSEL

Model	PDA300F-36	
Item	Inrush Current	Temperature 25°C Testing Circuitry Figure A
Object	————————	

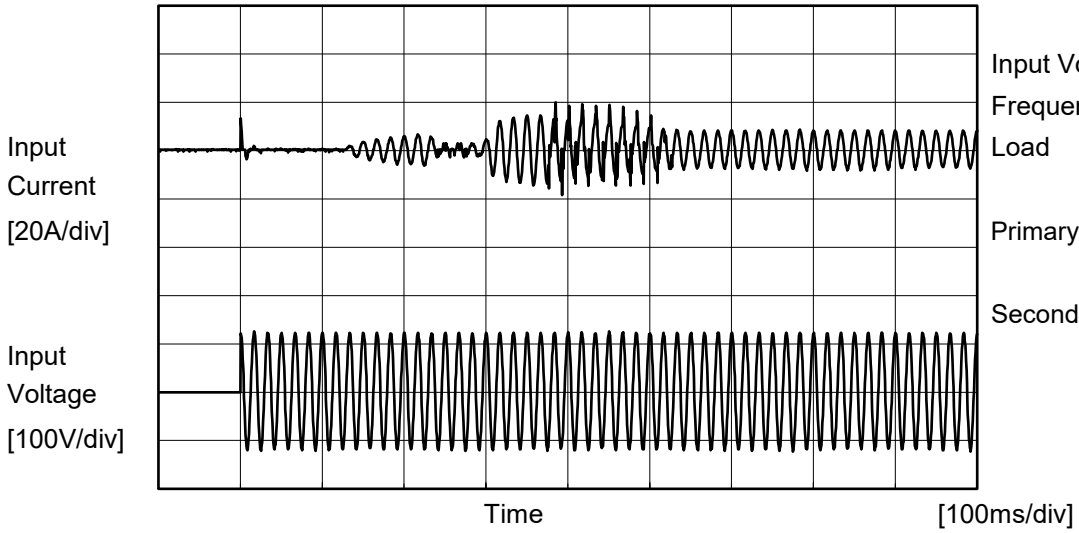

Input Voltage 100 V
Frequency 60 Hz
Load 100 %

Primary inrush current :
13.4 A
Secondary inrush current :
20.0 A

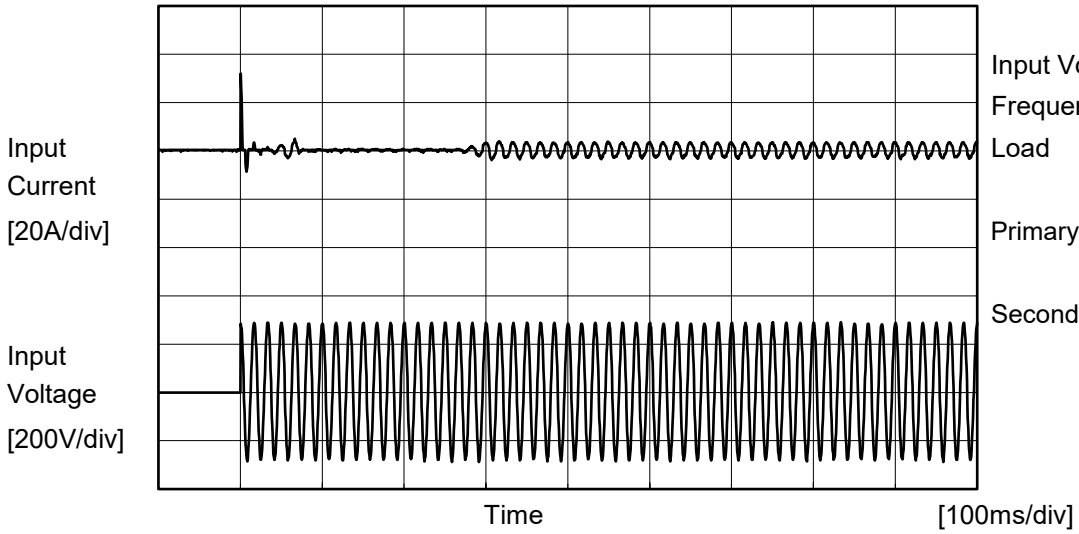

Input Voltage 230 V
Frequency 60 Hz
Load 100 %

Primary inrush current :
32.0 A
Secondary inrush current :
8.6 A

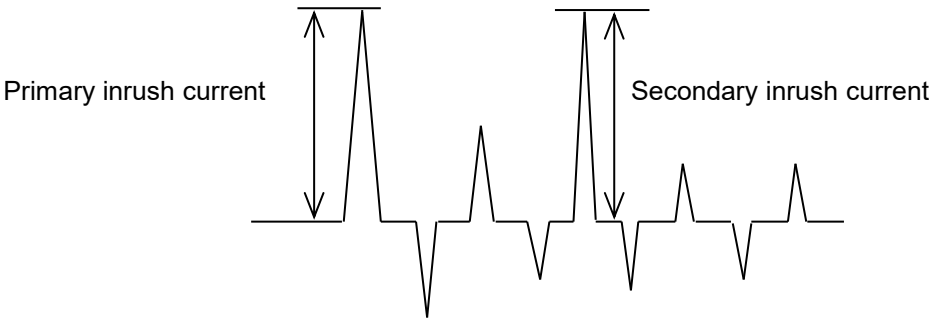

COSEL

Model	PDA300F-36	
Item	Leakage Current	Temperature 25°C Testing Circuitry Figure C
Object	――――――――――――	

1.Results

[mA]

Standards	Testing Circuitry	Measuring Method	Input Volt.			Note
			100 [V]	230 [V]	240 [V]	
DEN-AN	Figure C-1	Both phases	0.19	0.38	0.37	Operation
		One of phases	0.29	0.68	0.71	Stand by
IEC62368-1	Figure C-2	Both phases	0.14	0.35	0.37	Operation
		One of phases	0.26	0.67	0.70	Stand by
	Figure C-3	Both phases	0.14	0.35	0.37	Operation
		One of phases	0.26	0.66	0.69	Stand by

The value for "One of phases" is the reference value only.

2.Condition

Leakage current value is concluded after measuring both phases of AC input and by choosing the larger one.

COSEL

Model	PDA300F-36
Item	Line Regulation
Object	+36V9A

Temperature 25°C
Testing Circuitry Figure A

1.Graph

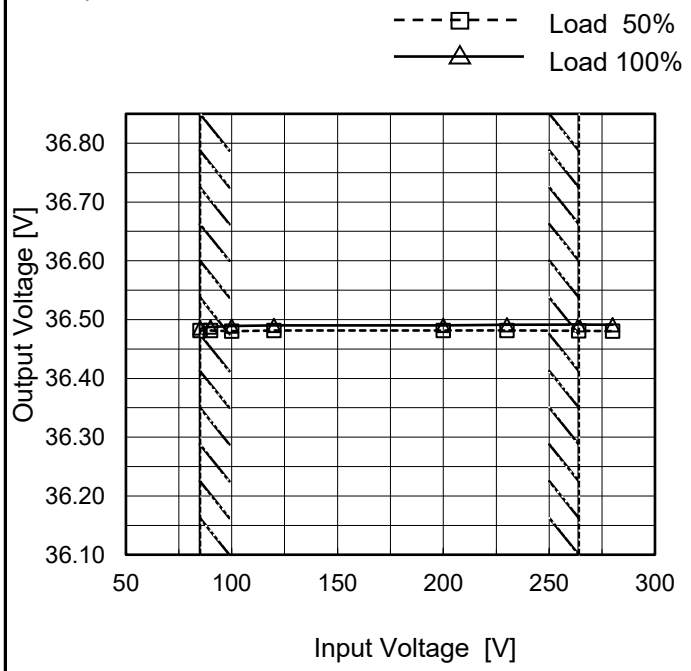

Note: Slanted line shows the range of the rated input voltage.

2.Values

Input Voltage [V]	Output Voltage [V]	
	Load 50%	Load 100%
85	36.481	36.486
90	36.481	36.487
100	36.480	36.489
120	36.481	36.490
200	36.481	36.490
230	36.482	36.491
264	36.481	36.492
280	36.481	36.491
--	-	-

BC-12164

COSEL

Model	PDA300F-36
Item	Load Regulation
Object	+36V9A

Temperature 25°C
Testing Circuitry Figure A

1.Graph

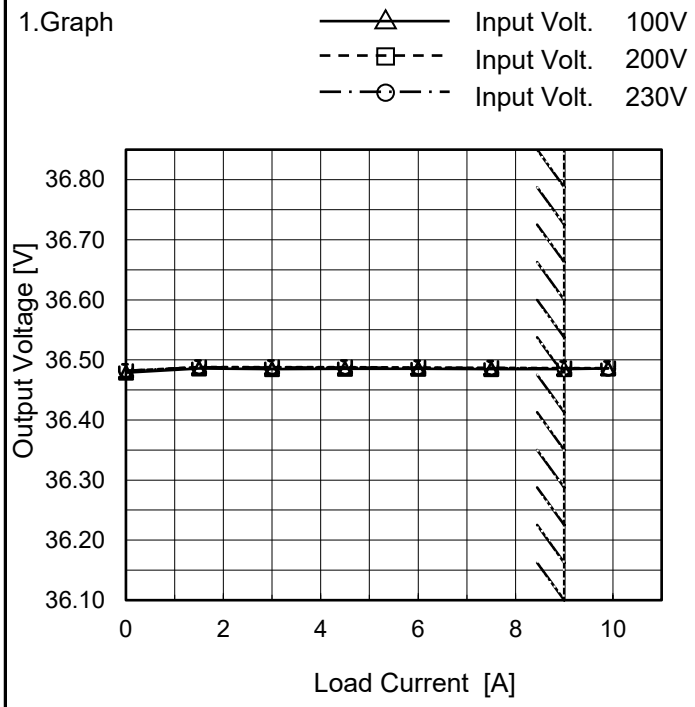

Note: Slanted line shows the range of the rated load current.

2.Values

Load Current [A]	Output Voltage [V]		
	Input Volt. 100[V]	Input Volt. 200[V]	Input Volt. 230[V]
0.0	36.479	36.482	36.482
1.5	36.486	36.488	36.488
3.0	36.485	36.488	36.487
4.5	36.485	36.488	36.487
6.0	36.485	36.487	36.487
7.5	36.485	36.487	36.486
9.0	36.485	36.487	36.486
9.9	36.486	36.486	36.485
--	--	--	--
--	--	--	--
--	--	--	--

Item	Ripple-Noise
Object	+36V9A

Temperature 25°C
Testing Circuitry Figure B

1.Graph

Input Voltage 230V
Load 100%

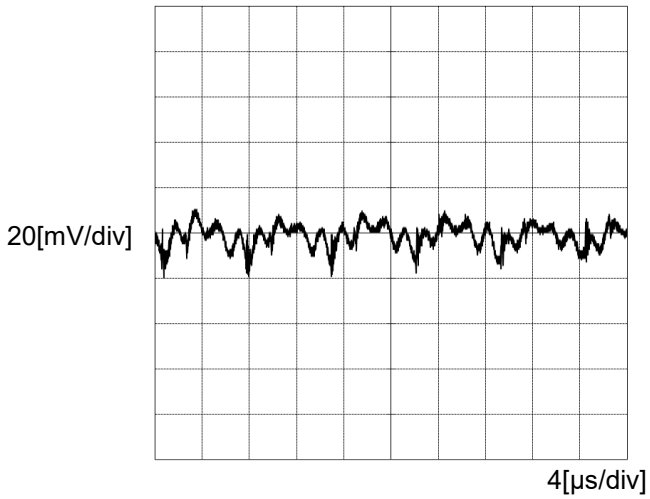

BC-12164

COSEL

Model	PDA300F-36	
Item	Dynamic Load Response	Temperature 25°C Testing Circuitry Figure A
Object	+36V9A	

Input Volt. 230 V

Cycle 1000 ms

Response. t1=t2=50µs. Typ

Load Current

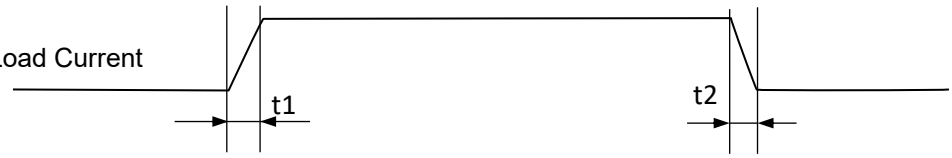

Load 0%(0A) ←→
Load 100%(9A)

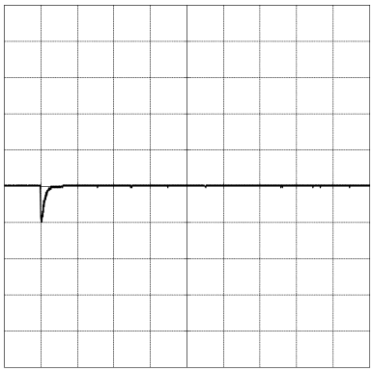

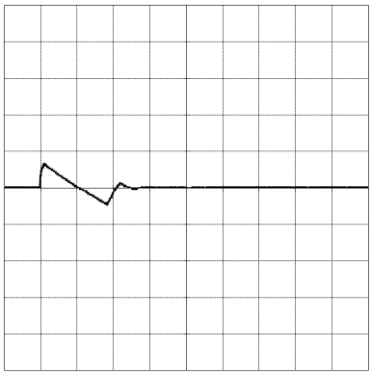

500[mV/div]

10[ms/div]

10[ms/div]

Load 50%(4.5A) ←→
Load 100%(9A)

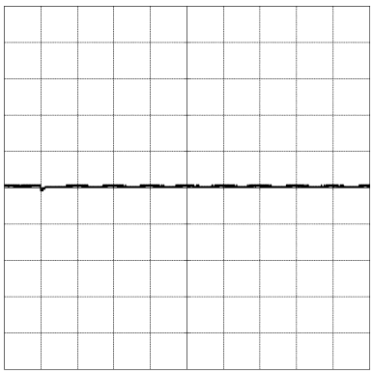

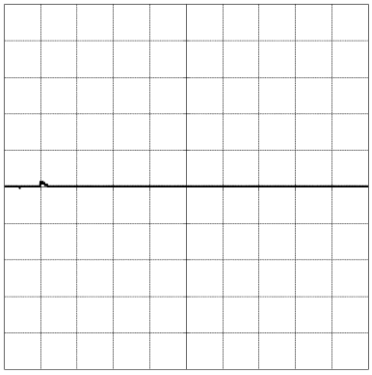

500[mV/div]

10[ms/div]

10[ms/div]

Load %(0A) ←→
Load 50%(4.5A)

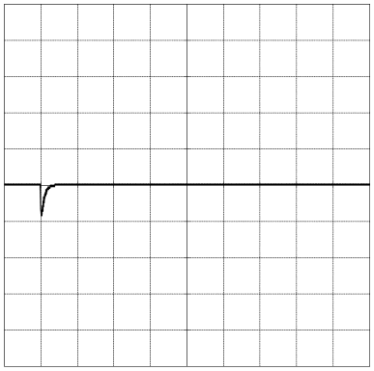

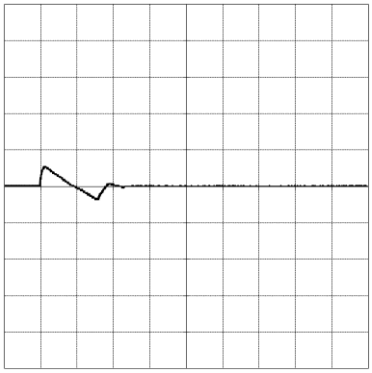

500[mV/div]

10[ms/div]

10[ms/div]

COSEL

Model	PDA300F-36	
Item	Rise and Fall Time	Temperature 25°C Testing Circuitry Figure A
Object	+36V9A	

1.Graph

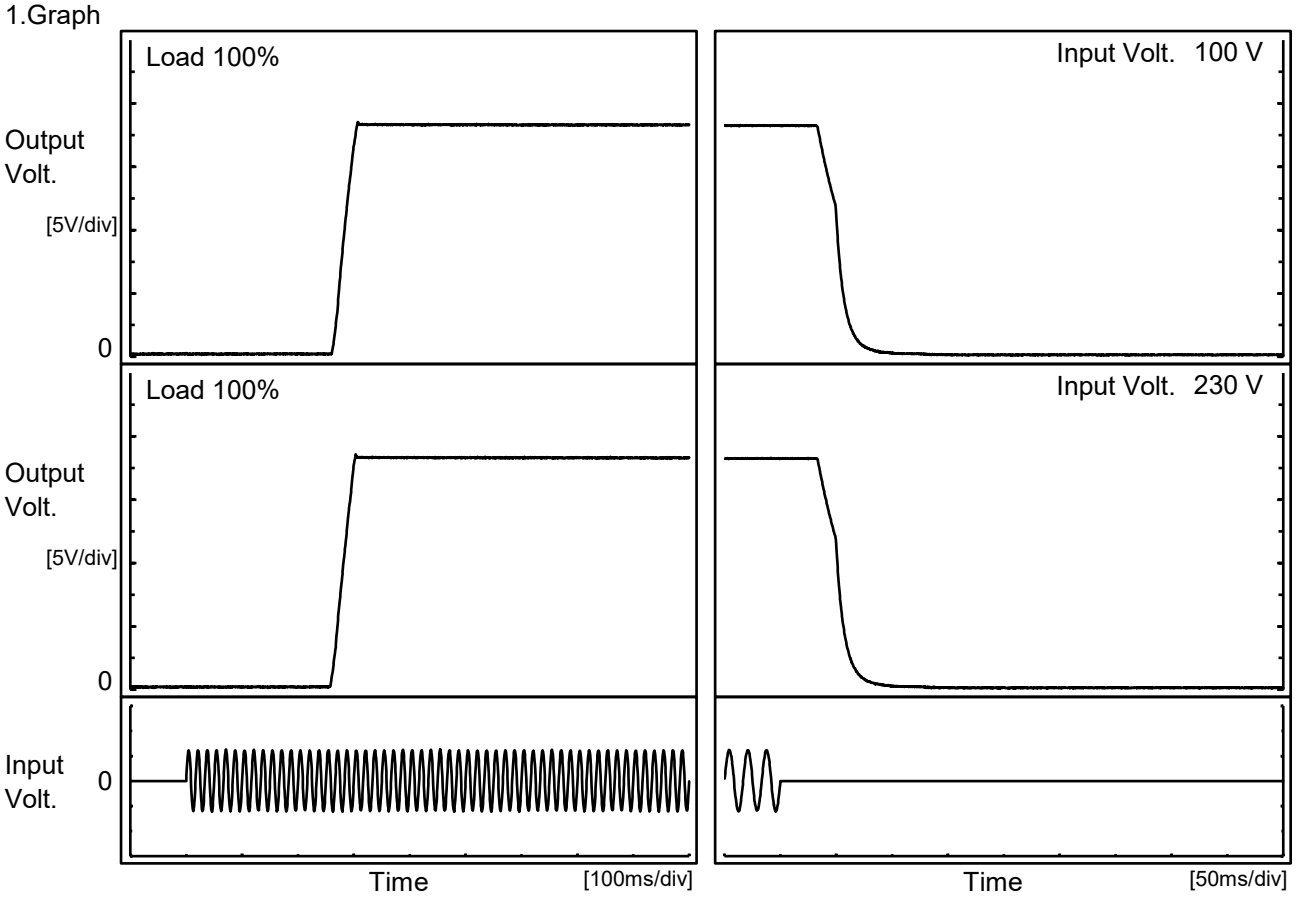

2.Values

[ms]

Input Volt. \ Time	Td	Tr	Ts	Th	Tf
100 V	266.5	32.5	299.0	37.5	27.3
230 V	263.5	33.0	296.5	37.5	27.5

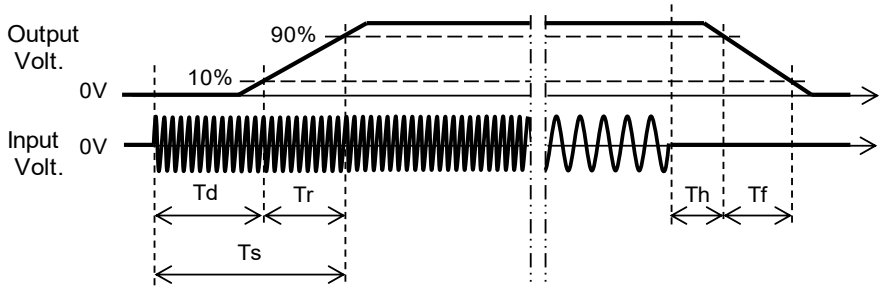

BC-12164

COSEL

Model	PDA300F-36
Item	Hold-Up Time
Object	+36V9A

Temperature 25°C
Testing Circuitry Figure A

1.Graph

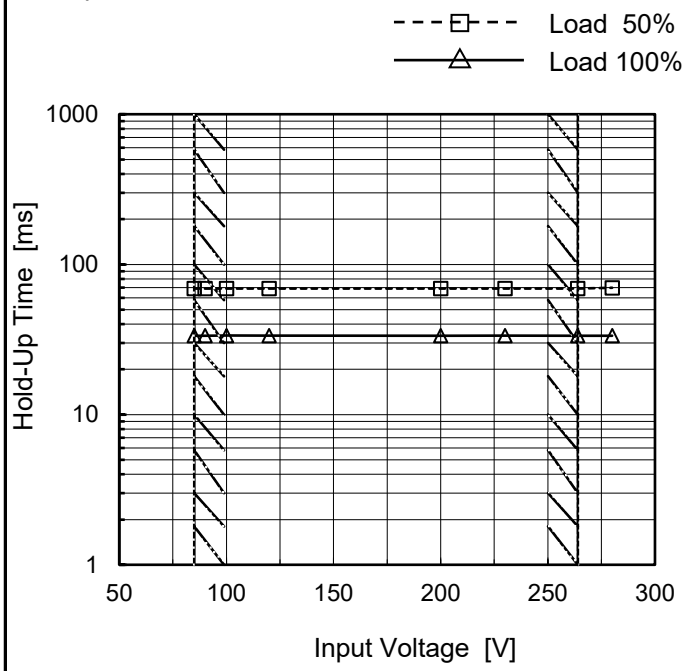

This duration covers from Shut-off of input voltage to the moment when output voltage descends to the rated range of voltage accuracy.
Note: Slanted line shows the range of the rated input voltage.

2.Values

Input Voltage [V]	Hold-Up Time [ms]	
	Load 50%	Load 100%
85	69	34
90	69	34
100	69	34
120	69	34
200	69	34
230	69	34
264	69	34
280	70	34
--	-	-

COSEL

Model	PDA300F-36
Item	Instantaneous Interruption Compensation
Object	+36V9A

Temperature 25°C
Testing Circuitry Figure A

1.Graph

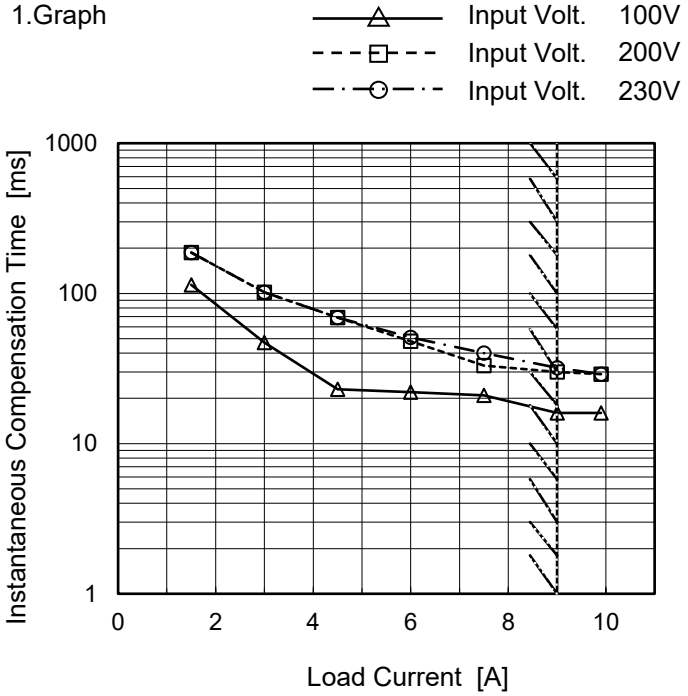

Note: Slanted line shows the range of the rated load current.

2.Values

Load Current [A]	Time [ms]		
	Input Volt. 100[V]	Input Volt. 200[V]	Input Volt. 230[V]
0.0	-	-	-
1.5	114	187	187
3.0	47	102	102
4.5	23	69	69
6.0	22	48	51
7.5	21	33	40
9.0	16	30	32
9.9	16	29	29
--	-	-	-
--	-	-	-
--	-	-	-

COSEL

Model	PDA300F-36
Item	Overcurrent Protection
Object	+36V9A

Temperature 25°C
Testing Circuitry Figure A

1.Graph

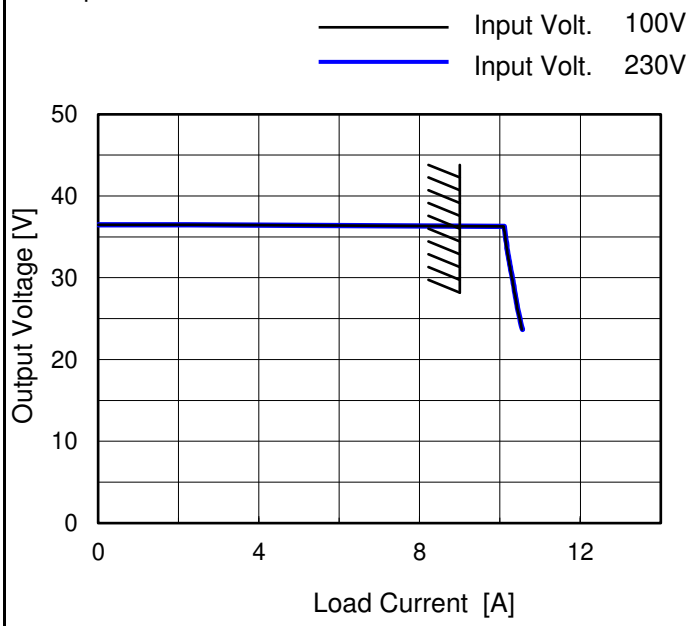

Note: Slanted line shows the range of the rated load current.

Intermittent operation occurs when the output voltage is from 25.2V to 0V.

2.Values

Output Voltage [V]	Load Current [A]	
	Input Volt. 100[V]	Input Volt. 230[V]
34.2	10.15	10.16
32.4	10.10	10.11
28.8	10.34	10.35
25.2	10.47	10.48
--	-	-
--	-	-
--	-	-
--	-	-
--	-	-
--	-	-
--	-	-
--	-	-

COSEL

Model	PDA300F-36	
Item	Ambient Temperature Drift	Testing Circuitry Figure A
Object	+36V9A	

1.Values

Load 100%

Ambient Temperature[℃]	Output Voltage [V]		
	Input Volt. 100V	Input Volt. 200V	Input Volt. 230V
-20	36.300	36.301	36.303
25	36.470	36.471	36.471
50	36.485	36.485	36.484

Item	Minimum Input Voltage for Regulated Output Voltage	Testing Circuitry Figure A
Object	+36V9A	

1.Values

Ambient Temperature[℃]	Input Voltage [V]	
	Load 50%	Load 100%
-20	68	67
25	68	67
50	68	67

Item	Overvoltage Protection	Testing Circuitry Figure A
Object	+36V9A	

1.Values

Load 0%

Ambient Temperature[℃]	Operating Point [V]	
	Input Volt. 100V	Input Volt. 230V
-20	50.10	50.10
25	50.33	50.33
50	50.33	50.33

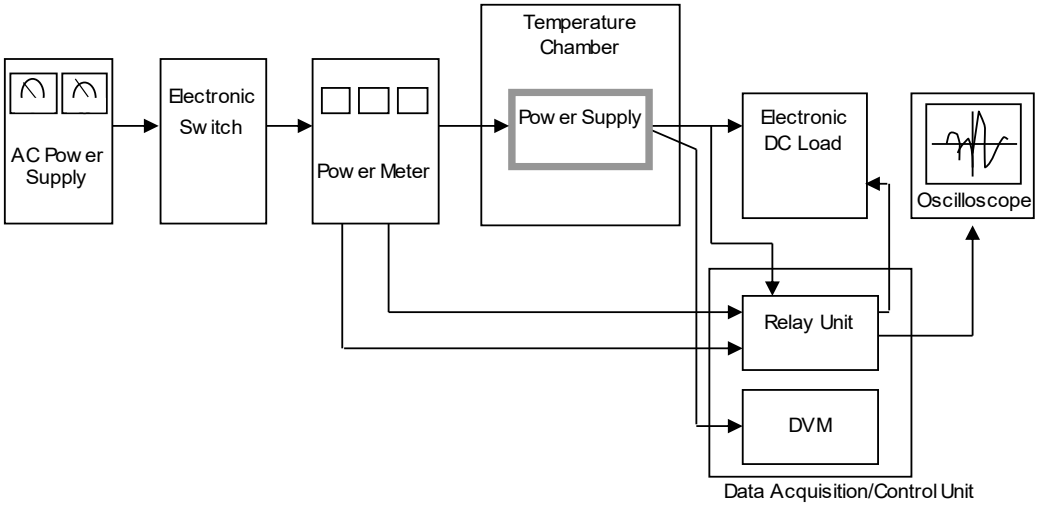

Figure A

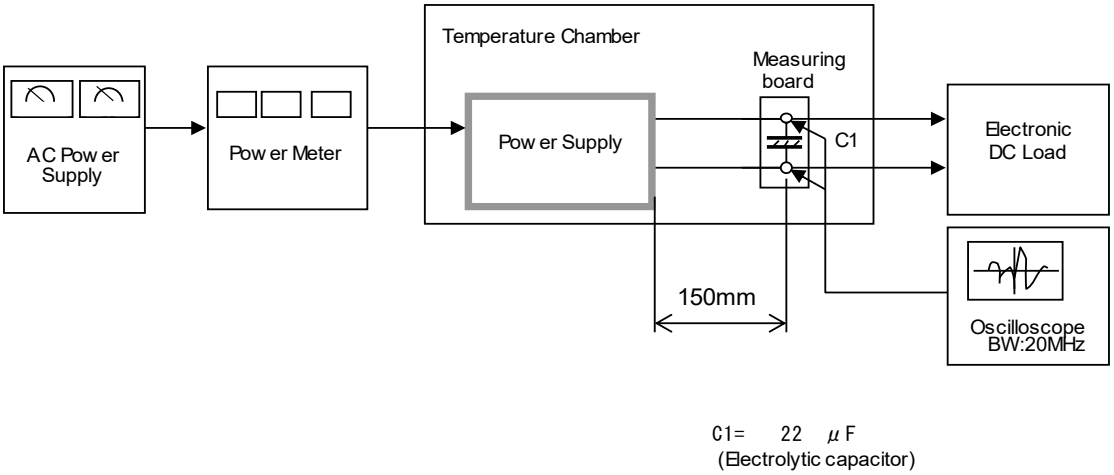

Figure B

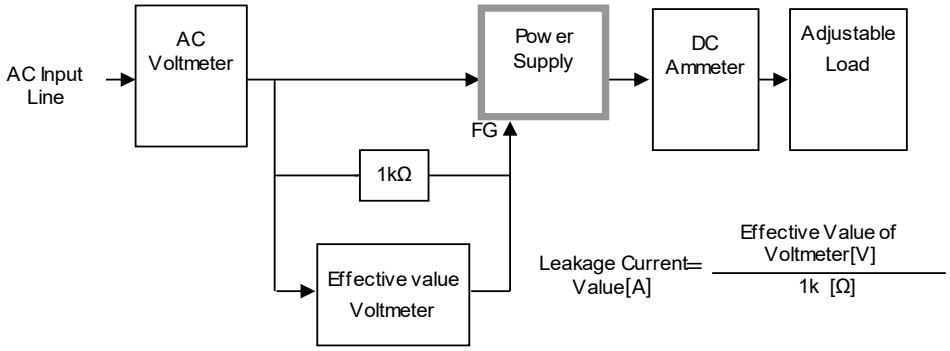

Figure C-1 (DEN-AN)

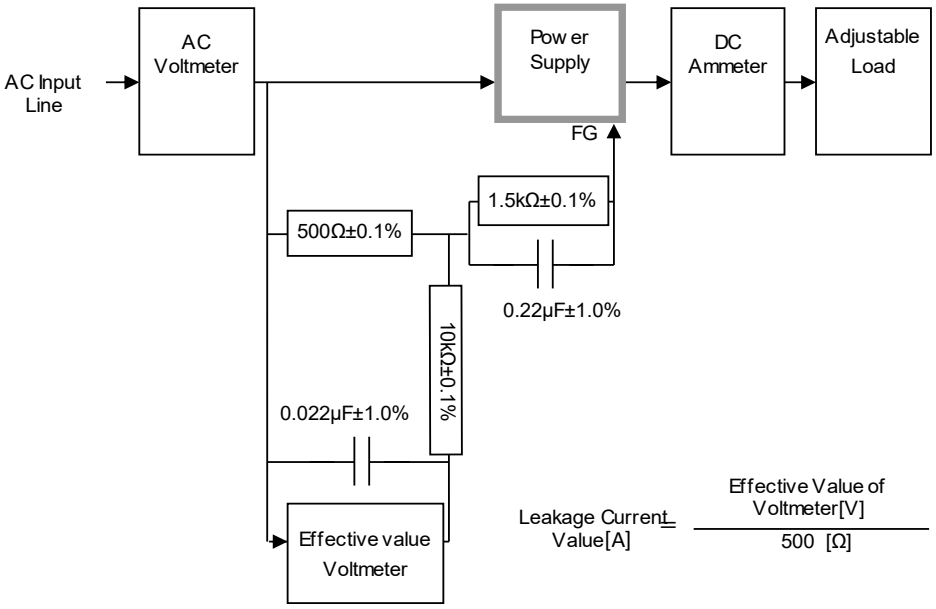

Figure C-2 (IEC62368-1 refer to IEC60990 Fig.4)

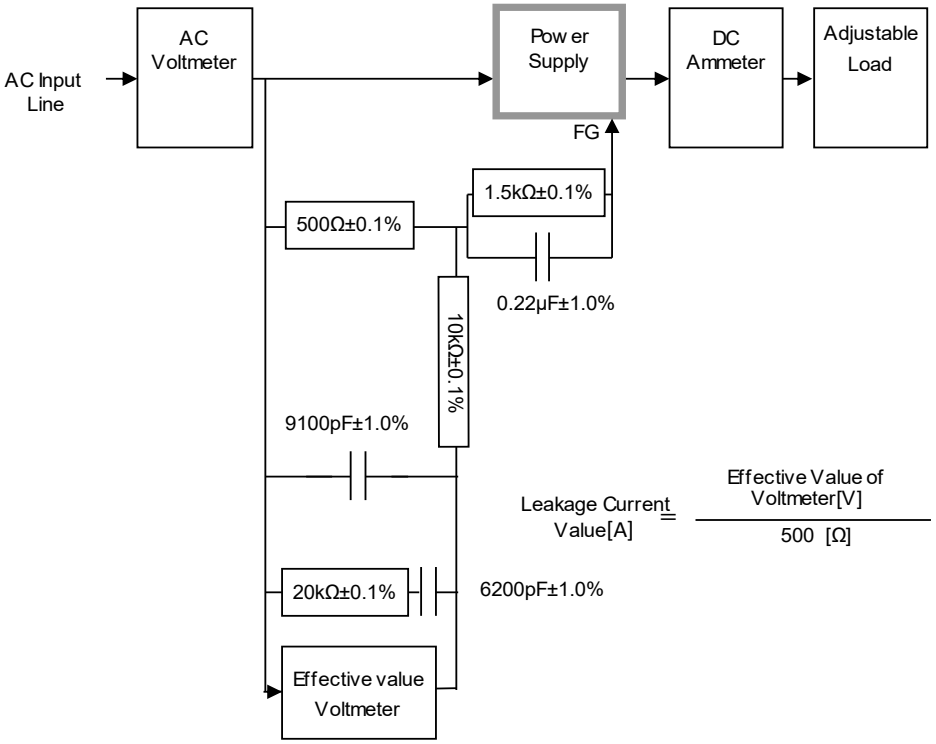

Figure C-3 (IEC62368-1 refer to IEC60990 Fig.5)