For Reference

COSEL

TEST DATA OF PDA300F-3R3

Regulated DC Power Supply
November 28, 2025

Approved by : Yoshiaki Shimizu
Design Manager

Prepared by : Fangcheng Zhong
Design Engineer

COSEL CO.,LTD.

COSEL

CONTENTS

1.Input Current (by Load Current) · 1
2.Efficiency (by Load Current) · 2
3.Power Factor (by Load Current) · 3
4.Inrush Current · 4
5.Leakage Current · 5
6.Line Regulation · 6
7.Load Regulation · 7
8.Ripple-Noise · 7
9.Dynamic Load Response · 8
10.Rise and Fall Time · 9
11.Hold-Up Time · 10
12.Instantaneous Interruption Compensation · · · · · · · · · · · · · · · · 11
13.Overcurrent Protection · 12
14.Ambient Temperature Drift · 13
15.Minimum Input Voltage for Regulated Output Voltage · · · · · · · · · 13
16.Overvoltage Protection · 13
17.Figure of Testing Circuitry · 14
(Final Page 15)

COSEL

Model	PDA300F-3R3
Item	Input Current (by Load Current)
Object	――――――

Temperature 25°C
Testing Circuitry Figure A

1.Graph

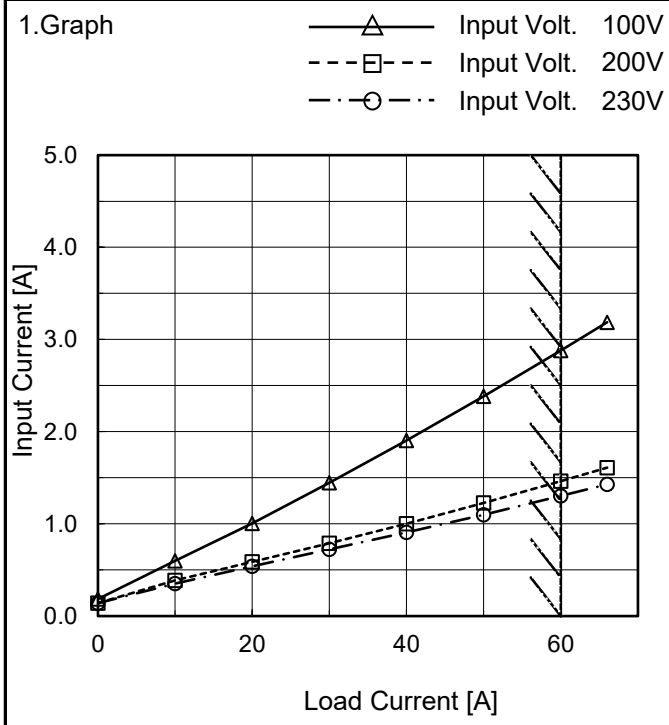

Note: Slanted line shows the range of the rated load current.

2.Values

Load Current [A]	Input Current [A]		
	Input Volt. 100[V]	Input Volt. 200[V]	Input Volt. 230[V]
0	0.185	0.141	0.140
10	0.599	0.388	0.353
20	1.005	0.589	0.538
30	1.447	0.790	0.725
40	1.905	1.001	0.909
50	2.384	1.227	1.100
60	2.880	1.462	1.302
66	3.187	1.610	1.428
--	-	-	-
--	-	-	-
--	-	-	-

BC-12179

COSEL

Model	PDA300F-3R3
Item	Efficiency (by Load Current)
Object	————————

Temperature 25°C
Testing Circuitry Figure A

1.Graph

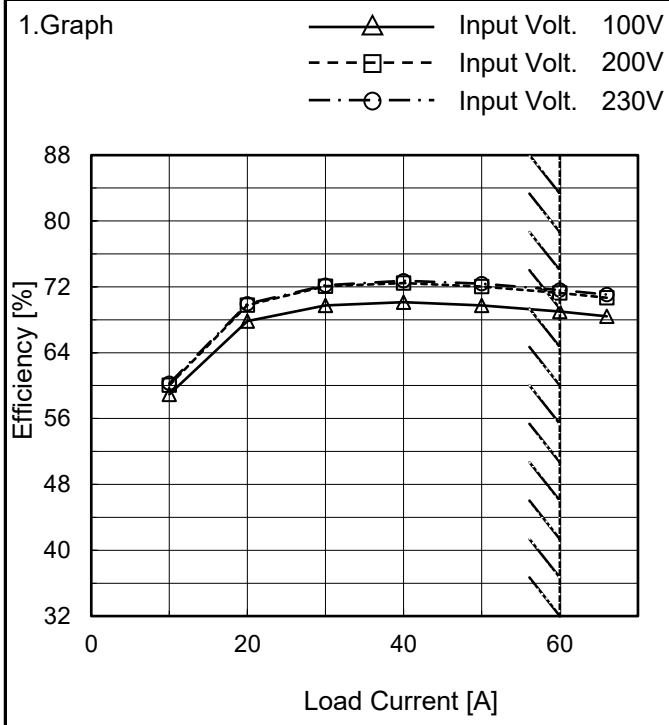

Note: Slanted line shows the range of the rated load current.

2.Values

Load Current [A]	Efficiency [%]		
	Input Volt. 100[V]	Input Volt. 200[V]	Input Volt. 230[V]
0	-	-	-
10	58.9	60.0	60.3
20	67.8	69.8	69.9
30	69.7	72.1	72.2
40	70.1	72.5	72.7
50	69.7	72.0	72.4
60	69.0	71.2	71.6
66	68.4	70.7	71.1
--	-	-	-
--	-	-	-
--	-	-	-

BC-12179

COSEL

Model	PDA300F-3R3
Item	Power Factor (by Load Current)
Object	————————

Temperature 25°C
Testing Circuitry Figure A

1.Graph

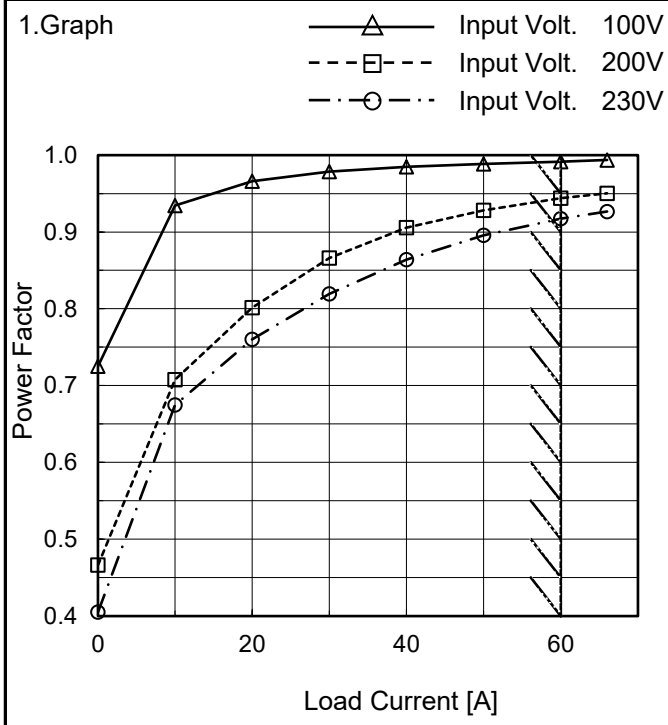

Note: Slanted line shows the range of the rated load current.

2.Values

Load Current [A]	Power Factor		
	Input Volt. 100[V]	Input Volt. 200[V]	Input Volt. 230[V]
0	0.725	0.466	0.405
10	0.934	0.708	0.675
20	0.966	0.801	0.760
30	0.979	0.866	0.820
40	0.985	0.906	0.864
50	0.989	0.928	0.896
60	0.991	0.944	0.917
66	0.994	0.950	0.927
--	-	-	-
--	-	-	-
--	-	-	-

BC-12179

COSEL

Model	PDA300F-3R3	
Item	Inrush Current	Temperature 25°C Testing Circuitry Figure A
Object	————————	

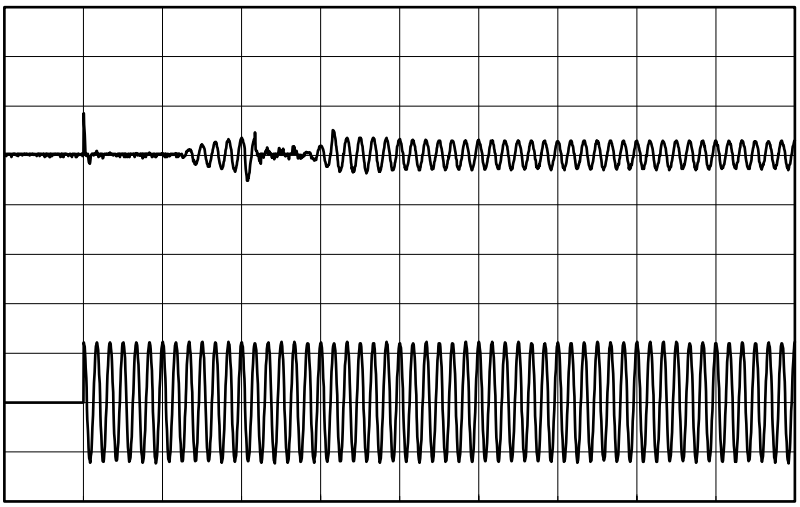

Input Voltage 100 V
Frequency 60 Hz
Load 100 %

Primary inrush current : 17.1 A

Secondary inrush current : 10.2 A

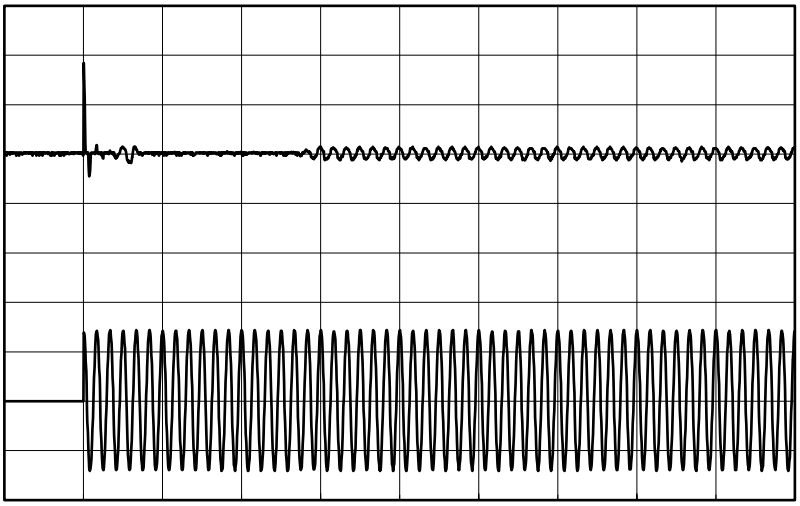

Input Voltage 230 V
Frequency 60 Hz
Load 100 %

Primary inrush current : 36.9 A

Secondary inrush current : 3.6 A

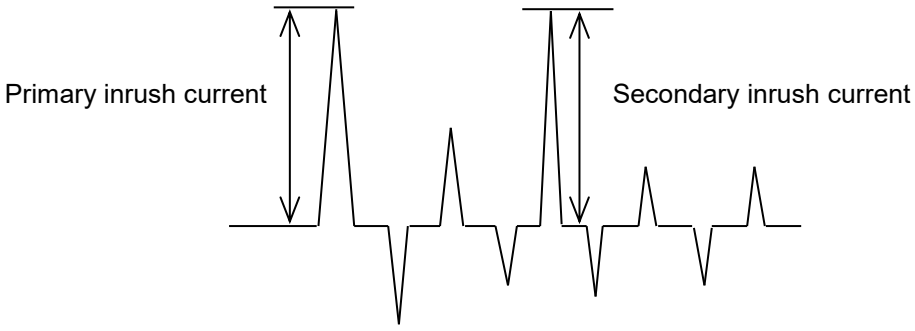

COSEL

Model	PDA300F-3R3
Item	Leakage Current
Object	――――――――――

Temperature 25°C
Testing Circuitry Figure C

1.Results

[mA]

Standards	Testing Circuitry	Measuring Method	Input Volt.			Note
			100 [V]	230 [V]	240 [V]	
DEN-AN	Figure C-1	Both phases	0.19	0.38	0.37	Operation
		One of phases	0.29	0.68	0.71	Stand by
IEC62368-1	Figure C-2	Both phases	0.14	0.35	0.37	Operation
		One of phases	0.26	0.67	0.70	Stand by
	Figure C-3	Both phases	0.14	0.35	0.37	Operation
		One of phases	0.26	0.66	0.69	Stand by

The value for "One of phases" is the reference value only.

2.Condition

Leakage current value is concluded after measuring both phases of AC input and by choosing the larger one.

COSEL

Model	PDA300F-3R3
Item	Line Regulation
Object	+3.3V60A

Temperature 25°C
Testing Circuitry Figure A

1.Graph

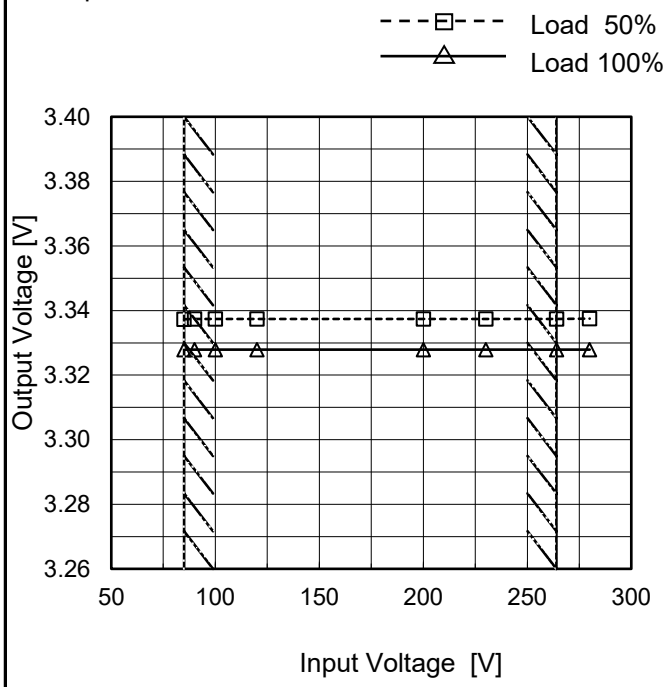

Note: Slanted line shows the range of the rated input voltage.

2.Values

Input Voltage [V]	Output Voltage [V]	
	Load 50%	Load 100%
85	3.337	3.328
90	3.337	3.328
100	3.337	3.328
120	3.337	3.328
200	3.337	3.328
230	3.337	3.328
264	3.337	3.328
280	3.338	3.328
--	-	-

BC-12179

COSEL

Model	PDA300F-3R3
Item	Load Regulation
Object	+3.3V60A

Temperature 25°C
Testing Circuitry Figure A

1.Graph

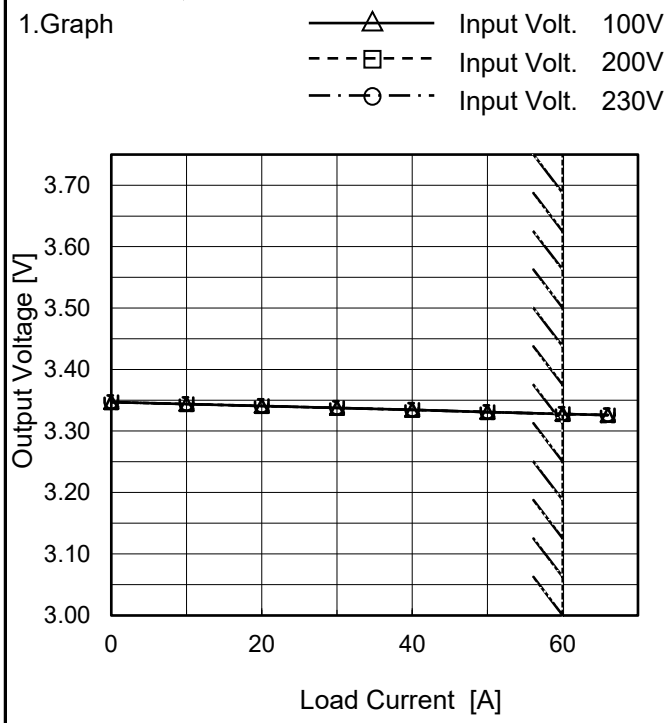

Note: Slanted line shows the range of the rated load current.

2.Values

Load Current [A]	Output Voltage [V] Input Volt. 100[V]	Input Volt. 200[V]	Input Volt. 230[V]
0	3.347	3.347	3.347
10	3.344	3.344	3.344
20	3.341	3.341	3.341
30	3.338	3.338	3.338
40	3.335	3.334	3.334
50	3.331	3.331	3.331
60	3.328	3.328	3.328
66	3.326	3.326	3.326
--	--	--	--
--	--	--	--
--	--	--	--

Item	Ripple-Noise
Object	+3.3V60A

Temperature 25°C
Testing Circuitry Figure B

1.Graph

Input Voltage 230V
Load 100%

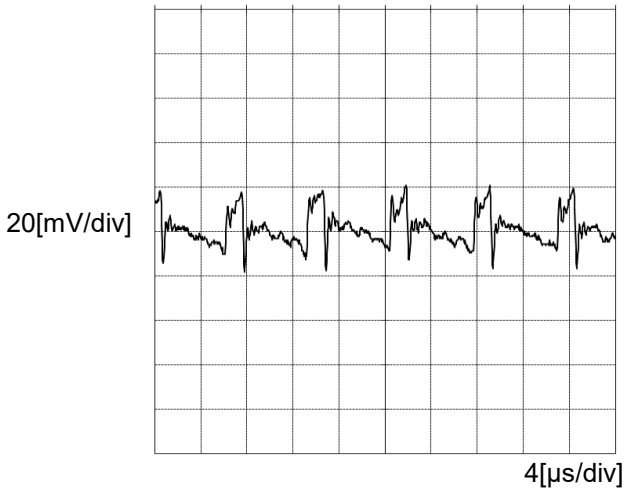

COSEL

Model	PDA300F-3R3	
Item	Dynamic Load Response	Temperature 25°C Testing Circuitry Figure A
Object	+3.3V60A	

Input Volt. 230 V
Cycle 1000 ms

Response. t1=t2=50µs. Typ

Load 0%(0A) ←→
Load 100%(60A)

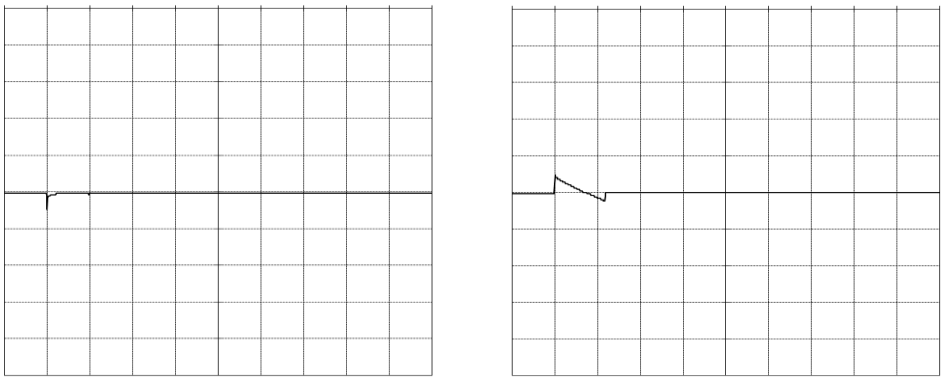

500[mV/div]

10[ms/div] 10[ms/div]

Load 50%(30A) ←→
Load 100%(60A)

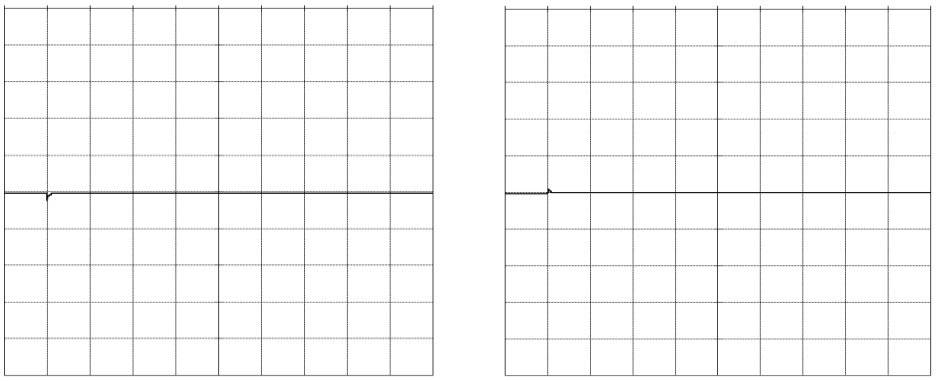

500[mV/div]

10[ms/div] 10[ms/div]

Load 0%(0A) ←→
Load 50%(30A)

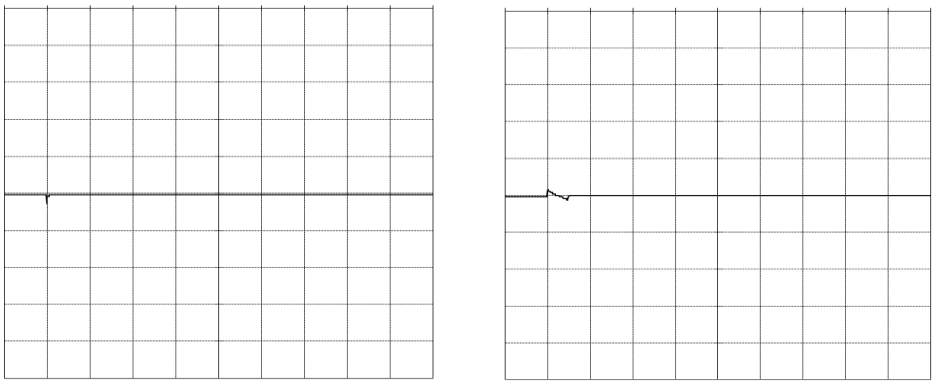

500[mV/div]

10[ms/div] 10[ms/div]

COSEL

Model	PDA300F-3R3
Item	Rise and Fall Time
Object	+3.3V60A

Temperature 25°C
Testing Circuitry Figure A

1.Graph

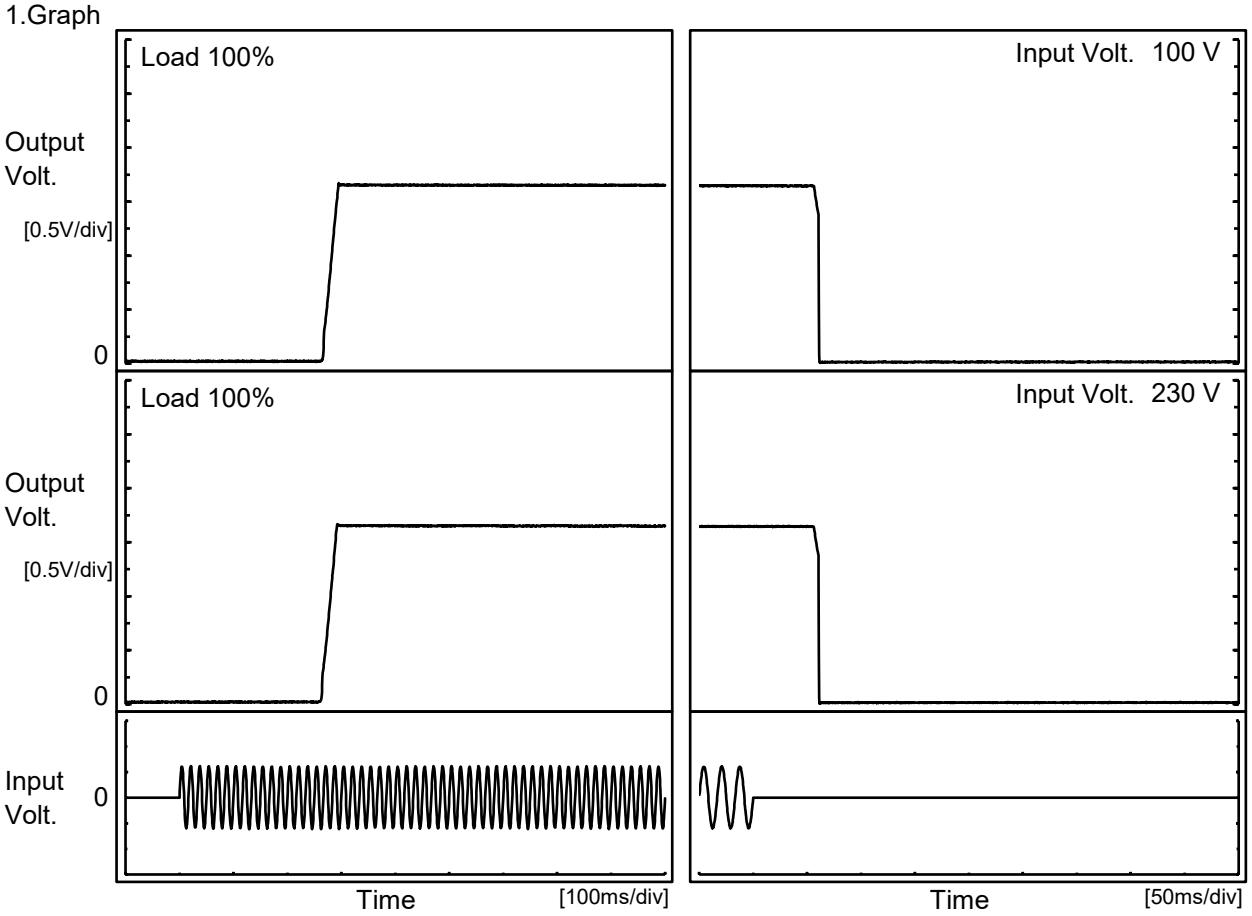

2.Values

[ms]

Input Volt. \ Time	Td	Tr	Ts	Th	Tf
100 V	267.5	24.0	291.5	58.5	2.5
230 V	265.0	24.0	289.0	58.5	2.5

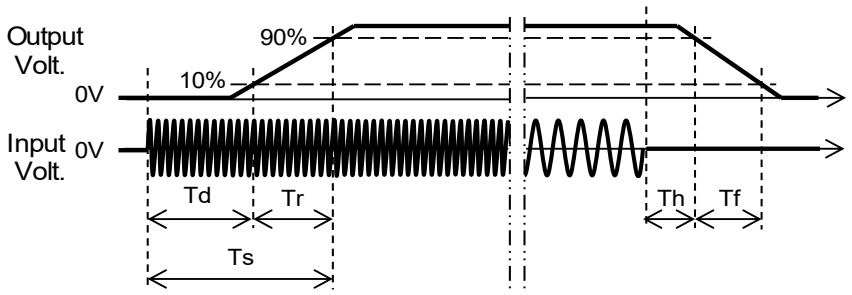

BC-12179

COSEL

Model	PDA300F-3R3
Item	Hold-Up Time
Object	+3.3V60A

Temperature 25°C
Testing Circuitry Figure A

1.Graph

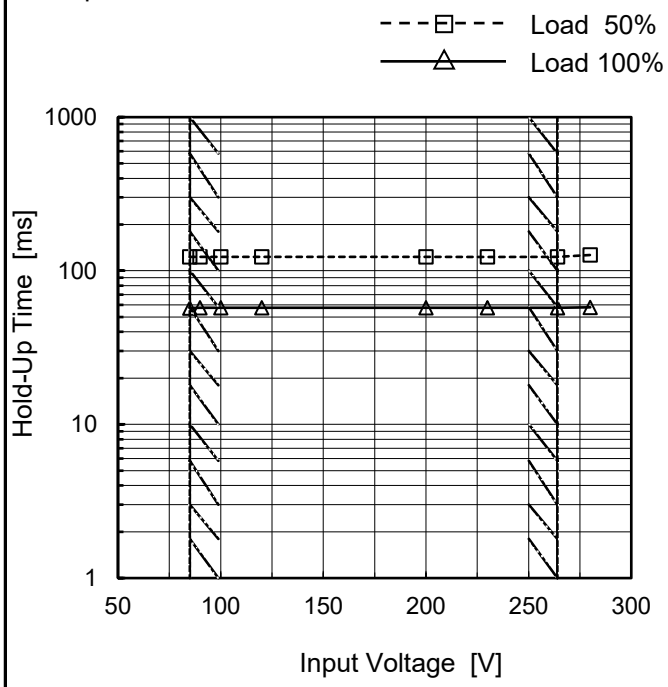

This duration covers from Shut-off of input voltage to the moment when output voltage descends to the rated range of voltage accuracy.
Note: Slanted line shows the range of the rated input voltage.

2.Values

Input Voltage [V]	Hold-Up Time [ms]	
	Load 50%	Load 100%
85	123	57
90	123	57
100	123	57
120	123	58
200	123	57
230	123	57
264	123	58
280	127	58
--	-	-

BC-12179

COSEL

Model	PDA300F-3R3
Item	Instantaneous Interruption Compensation
Object	+3.3V60A

Temperature 25°C
Testing Circuitry Figure A

1.Graph

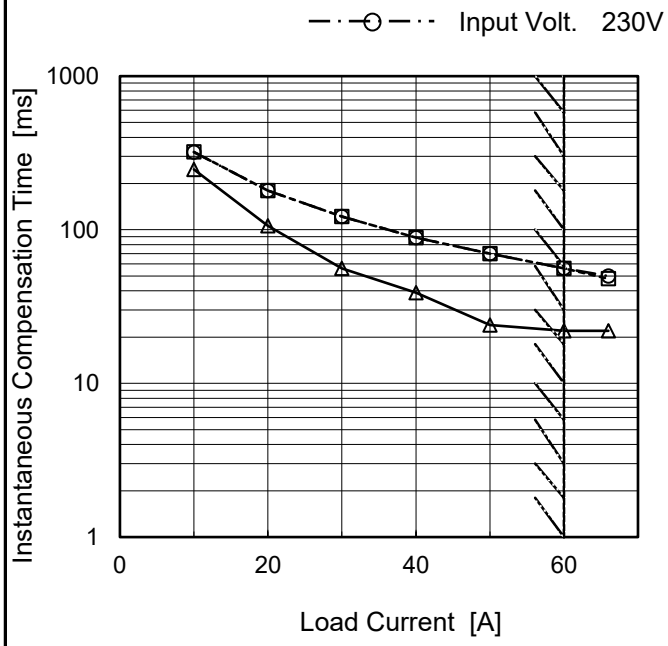

Note: Slanted line shows the range of the rated load current.

2.Values

Load Current [A]	Time [ms]		
	Input Volt. 100[V]	Input Volt. 200[V]	Input Volt. 230[V]
0	-	-	-
10	247	321	320
20	106	180	180
30	56	122	122
40	39	89	89
50	24	70	70
60	22	56	56
66	22	48	50
--	-	-	-
--	-	-	-
--	-	-	-

BC-12179

COSEL

Model	PDA300F-3R3
Item	Overcurrent Protection
Object	+3.3V60A

Temperature 25°C
Testing Circuitry Figure A

1.Graph

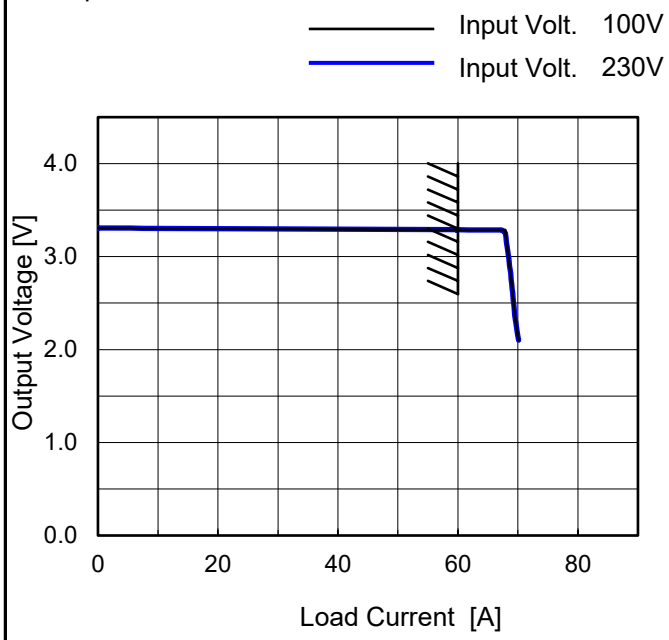

Note: Slanted line shows the range of the rated load current.

Intermittent operation occurs when the output voltage is from 2.31V to 0V.

2.Values

Output Voltage [V]	Load Current [A]	
	Input Volt. 100[V]	Input Volt. 230[V]
3.135	68.16	68.17
2.970	68.40	68.46
2.640	69.00	69.03
2.310	69.54	69.57
--	-	-
--	-	-
--	-	-
--	-	-
--	-	-
--	-	-
--	-	-
--	-	-

COSEL

Model	PDA300F-3R3
Item	Ambient Temperature Drift
Object	+3.3V60A

Testing Circuitry Figure A

1.Values

Load 100%

Ambient Temperature[°C]	Output Voltage [V]		
	Input Volt. 100V	Input Volt. 200V	Input Volt. 230V
-20	3.323	3.324	3.324
25	3.327	3.327	3.327
50	3.327	3.327	3.327

Item	Minimum Input Voltage for Regulated Output Voltage
Object	+3.3V60A

Testing Circuitry Figure A

1.Values

Ambient Temperature[°C]	Input Voltage [V]	
	Load 50%	Load 100%
-20	67	68
25	67	69
50	67	69

Item	Overvoltage Protection
Object	+3.3V60A

Testing Circuitry Figure A

1.Values

Load 0%

Ambient Temperature[°C]	Operating Point [V]	
	Input Volt. 100V	Input Volt. 230V
-20	5.36	5.36
25	5.36	5.36
50	5.36	5.35

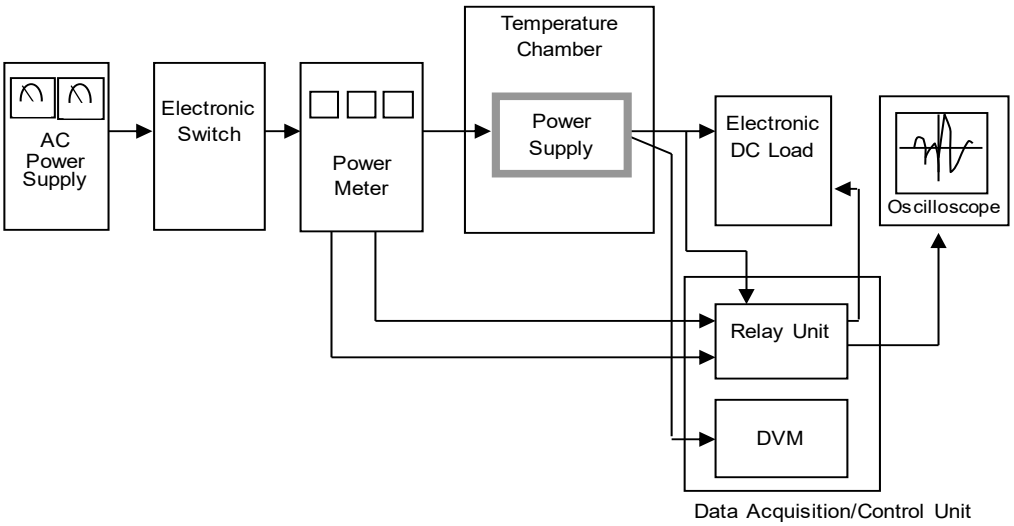

Figure A

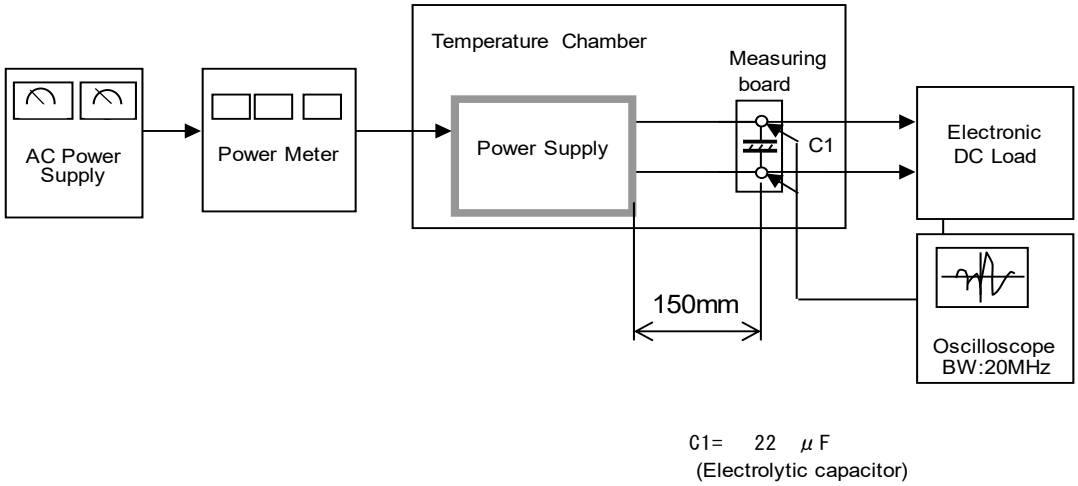

Figure B

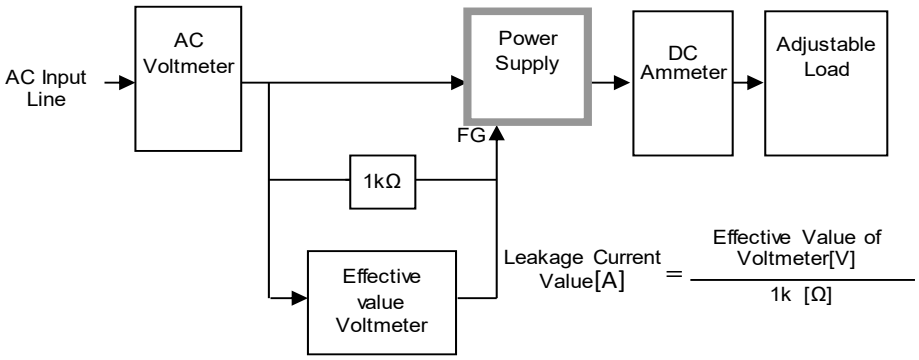

Figure C-1 (DEN-AN)

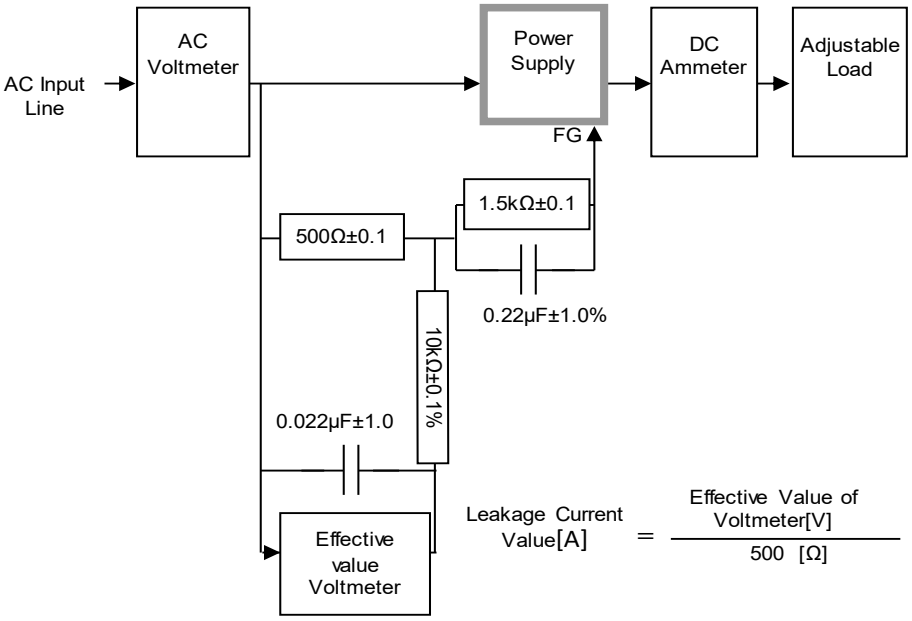

Figure C-2 (IEC62368-1 refer to IEC60990 Fig.4)

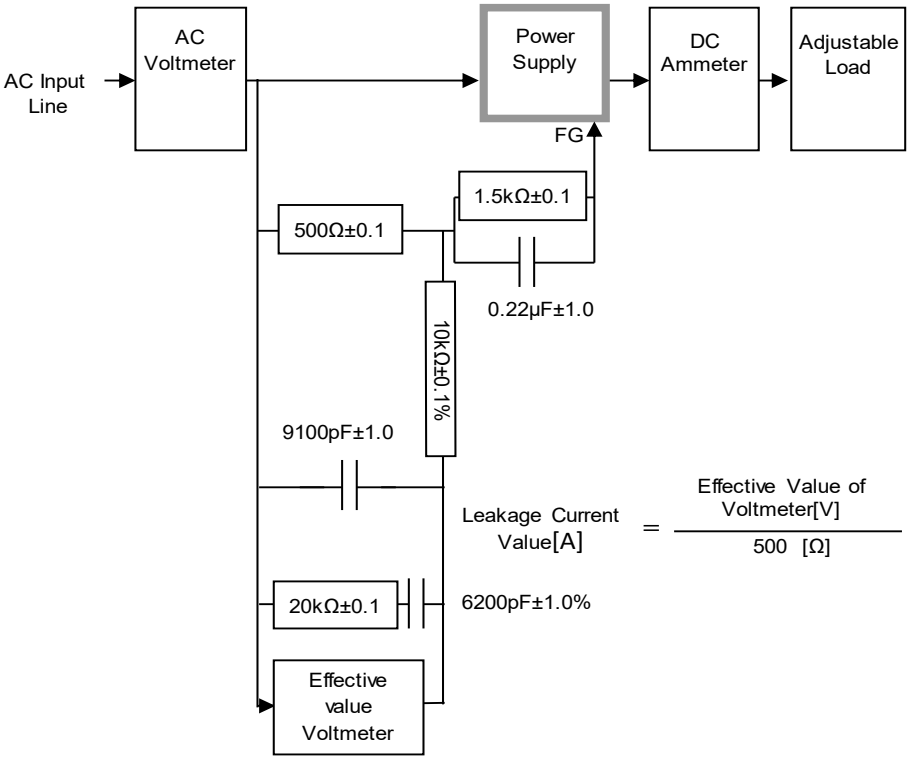

Figure C-3 (IEC62368-1 refer to IEC60990 Fig.5)