COSEL

For Reference

TEST DATA OF PDA50F-5

Regulated DC Power Supply
November 28, 2023

Approved by : Tetsukazu Okamoto
Design Manager

Prepared by : Takaaki Sekiguchi
Design Engineer

COSEL CO.,LTD.

COSEL

CONTENTS

1.Input Current (by Load Current) · 1
2.Efficiency (by Load Current) · 2
3.Power Factor (by Load Current) · 3
4.Inrush Current · 4
5.Leakage Current · 5
6.Line Regulation · 6
7.Load Regulation · 7
8.Ripple-Noise · 7
9.Dynamic Load Response · 8
10.Rise and Fall Time · 9
11.Hold-Up Time · 10
12.Instantaneous Interruption Compensation · · · · · · · · · · · · · · · · · 11
13.Overcurrent Protection · 12
14.Ambient Temperature Drift · 13
15.Minimum Input Voltage for Regulated Output Voltage · · · · · · · · · · · 13
16.Overvoltage Protection · 13
17.Figure of Testing Circuitry · 14
(Final Page 15)

COSEL

Model	PDA50F-5
Item	Input Current (by Load Current)
Object	――――――――

Temperature 25°C
Testing Circuitry Figure A

1.Graph

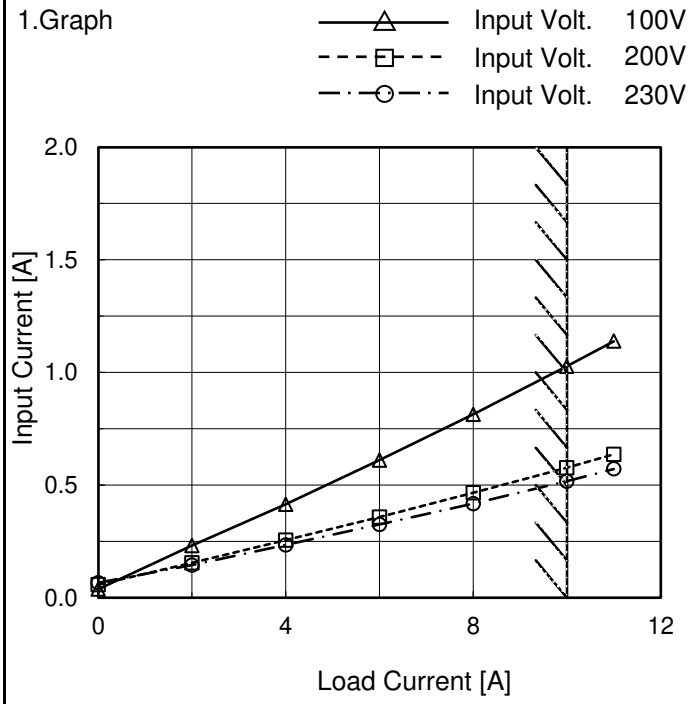

Note: Slanted line shows the range of the rated load current.

2.Values

Load Current [A]	Input Current [A]		
	Input Volt. 100[V]	Input Volt. 200[V]	Input Volt. 230[V]
0	0.038	0.059	0.067
2	0.231	0.155	0.145
4	0.415	0.255	0.234
6	0.611	0.358	0.325
8	0.814	0.465	0.418
10	1.027	0.577	0.517
11	1.139	0.637	0.572
--	-	-	-
--	-	-	-
--	-	-	-
--	-	-	-

BC-11959

COSEL

Model	PDA50F-5
Item	Efficiency (by Load Current)
Object	————————

Temperature 25°C
Testing Circuitry Figure A

1.Graph

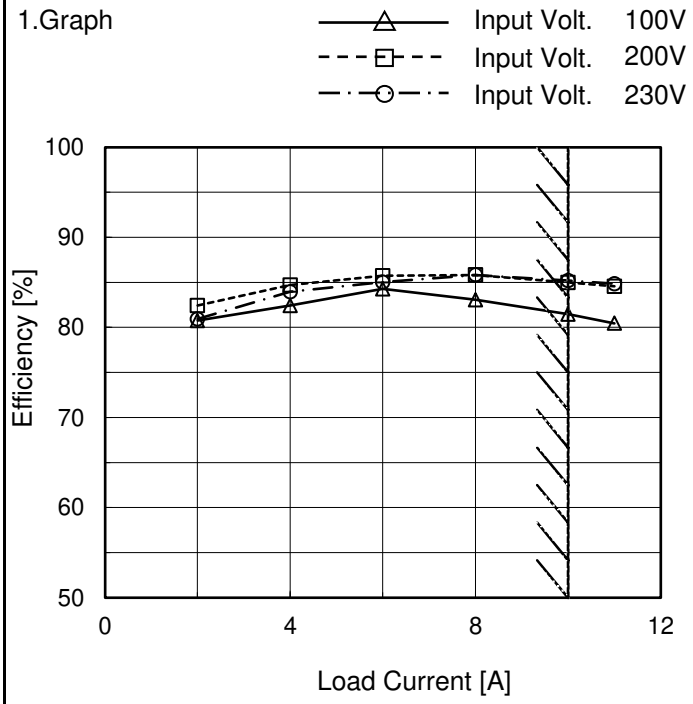

Note: Slanted line shows the range of the rated load current.

2.Values

Load Current [A]	Efficiency [%]		
	Input Volt. 100[V]	Input Volt. 200[V]	Input Volt. 230[V]
0	-	-	-
2	80.7	82.4	81.0
4	82.4	84.7	83.9
6	84.3	85.7	85.0
8	83.1	85.8	85.8
10	81.5	85.0	85.2
11	80.5	84.6	84.8
--	-	-	-
--	-	-	-
--	-	-	-
--	-	-	-

COSEL

Model	PDA50F-5
Item	Power Factor (by Load Current)
Object	————————

Temperature 25°C
Testing Circuitry Figure A

1.Graph

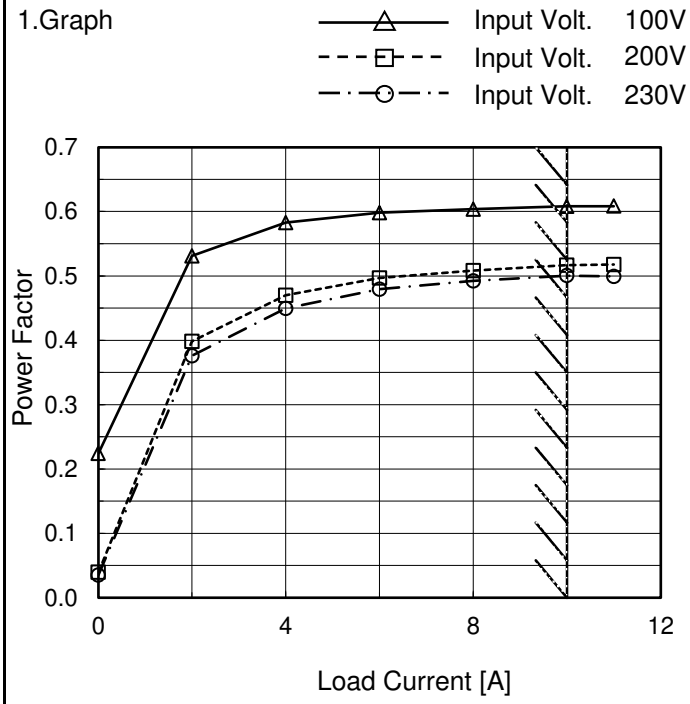

Note: Slanted line shows the range of the rated load current.

2.Values

Load Current [A]	Power Factor		
	Input Volt. 100[V]	Input Volt. 200[V]	Input Volt. 230[V]
0	0.224	0.040	0.035
2	0.531	0.398	0.376
4	0.583	0.470	0.450
6	0.598	0.497	0.479
8	0.604	0.508	0.492
10	0.608	0.517	0.501
11	0.609	0.518	0.499
--	-	-	-
--	-	-	-
--	-	-	-
--	-	-	-

BC-11959

COSEL

Model	PDA50F-5	
Item	Inrush Current	Temperature 25°C Testing Circuitry Figure A
Object	————————	

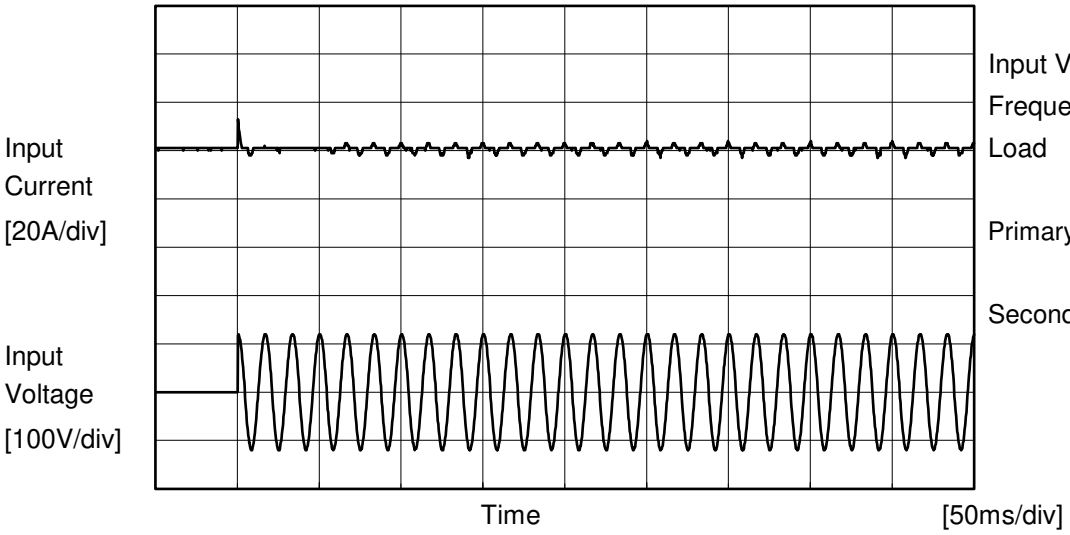

Input Voltage 100 V
Frequency 60 Hz
Load 100 %

Primary inrush current : 12.8 A
Secondary inrush current : 3.8 A

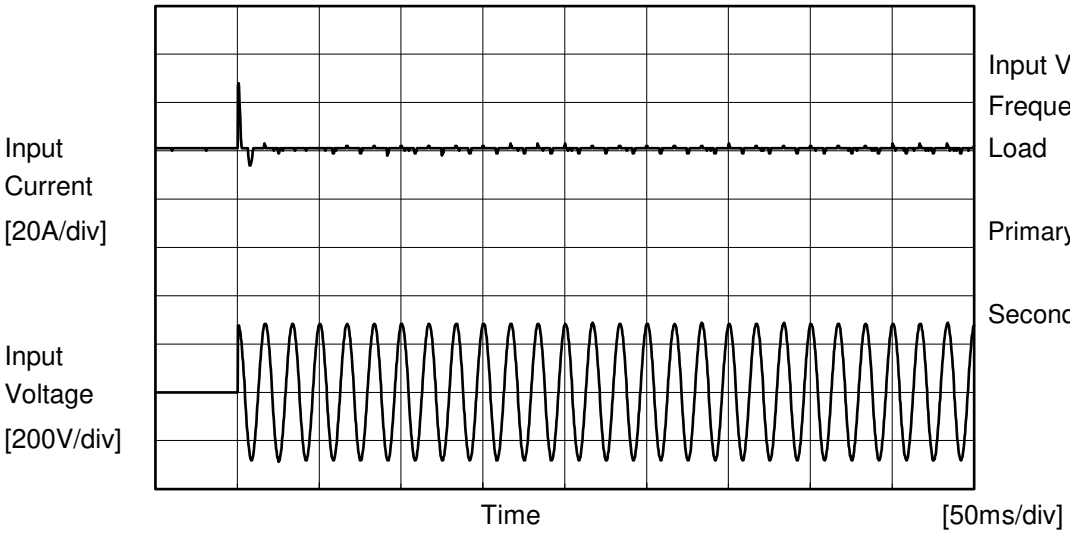

Input Voltage 230 V
Frequency 60 Hz
Load 100 %

Primary inrush current : 27.8 A
Secondary inrush current : 2.8 A

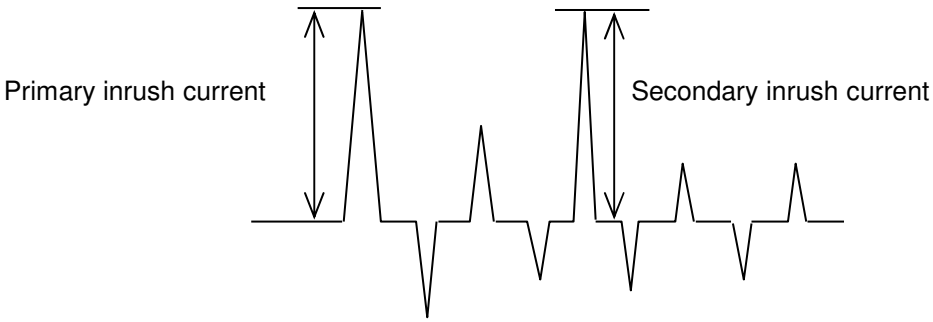

COSEL

Model	PDA50F-5	
Item	Leakage Current	Temperature 25°C Testing Circuitry Figure C
Object	――――――――――――	

1.Results

[mA]

Standards	Testing Circuitry	Measuring Method	Input Volt.			Note
			100 [V]	230 [V]	240 [V]	
DEN-AN	Figure C-1	Both phases	0.18	0.47	0.49	Operation
		One of phases	0.26	0.68	0.72	Stand by
IEC62368-1	Figure C-2	Both phases	0.18	0.46	0.48	Operation
		One of phases	0.26	0.67	0.71	Stand by
	Figure C-3	Both phases	0.18	0.46	0.48	Operation
		One of phases	0.26	0.67	0.71	Stand by

The value for "One of phases" is the reference value only.

2.Condition

Leakage current value is concluded after measuring both phases of AC input and by choosing the larger one.

COSEL

Model	PDA50F-5
Item	Line Regulation
Object	+5V10A

Temperature 25°C
Testing Circuitry Figure A

1.Graph

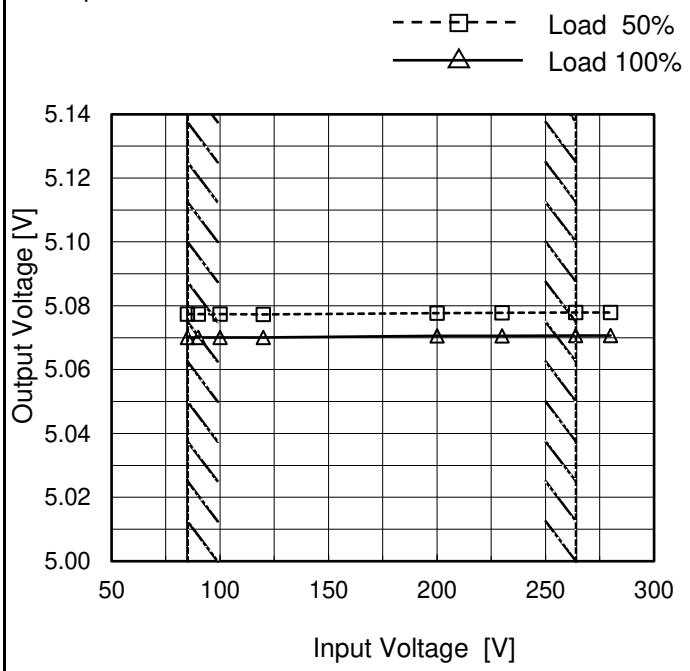

Note: Slanted line shows the range of the rated input voltage.

2.Values

Input Voltage [V]	Output Voltage [V]	
	Load 50%	Load 100%
85	5.077	5.070
90	5.077	5.070
100	5.077	5.070
120	5.077	5.070
200	5.078	5.071
230	5.078	5.071
264	5.078	5.071
280	5.078	5.071
--	-	-

COSEL

Model	PDA50F-5
Item	Load Regulation
Object	+5V10A

Temperature 25°C
Testing Circuitry Figure A

1.Graph

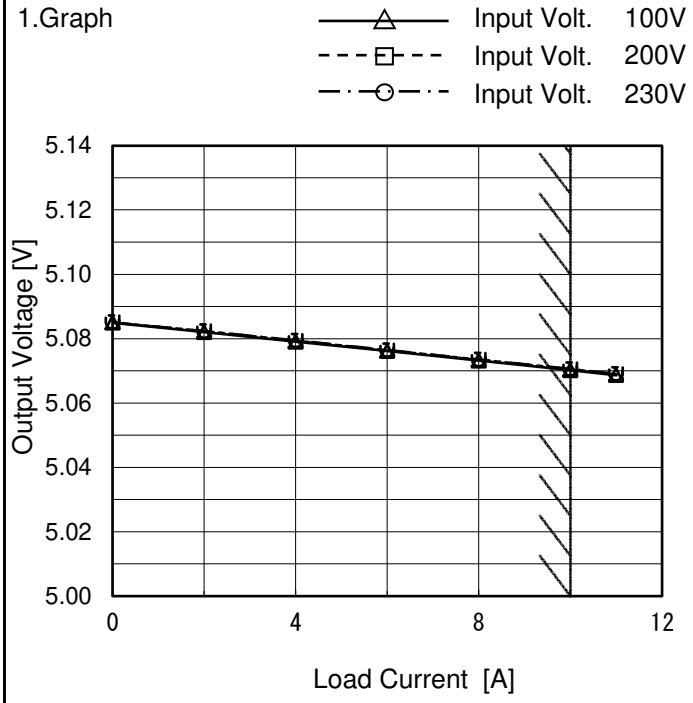

Note: Slanted line shows the range of the rated load current.

2.Values

Load Current [A]	Output Voltage [V]		
	Input Volt. 100[V]	Input Volt. 200[V]	Input Volt. 230[V]
0	5.085	5.085	5.085
2	5.082	5.082	5.082
4	5.079	5.079	5.080
6	5.076	5.076	5.077
8	5.073	5.074	5.074
10	5.070	5.071	5.071
11	5.069	5.069	5.069
--	--	--	--
--	--	--	--
--	--	--	--
--	--	--	--

Item	Ripple-Noise
Object	+5V10A

Temperature 25°C
Testing Circuitry Figure B

1.Graph

Input Voltage 230V
Load 100%

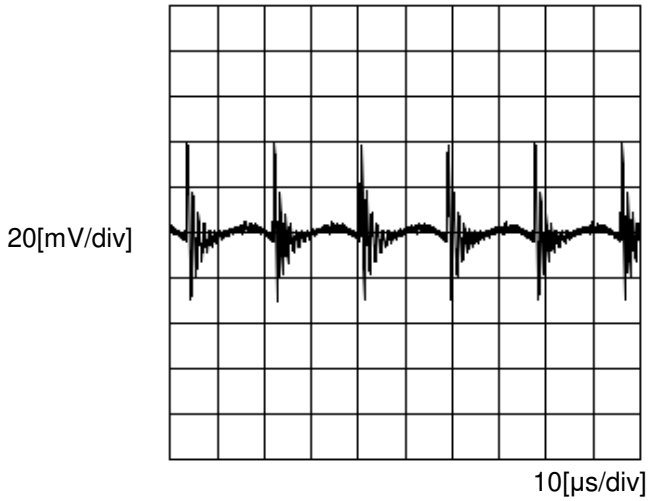

BC-11959

COSEL

Model	PDA50F-5	
Item	Dynamic Load Response	Temperature 25°C Testing Circuitry Figure A
Object	+5V10A	

Input Volt. 230 V

Cycle 1000 ms

Response. t1=t2=50µs. Typ

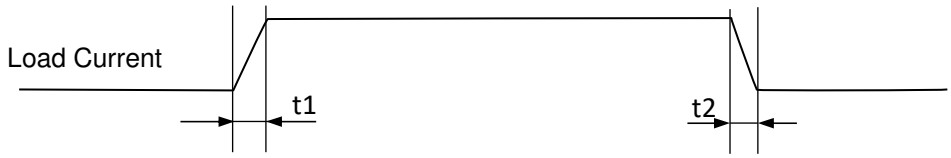

Load 0%(0A) ←→
Load 100%(10A)

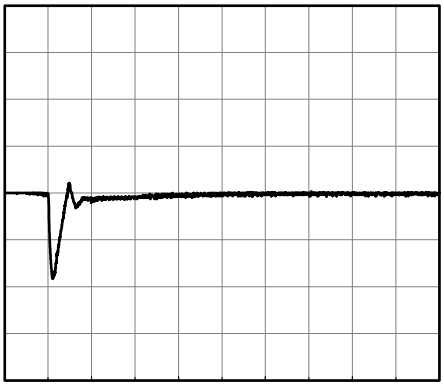

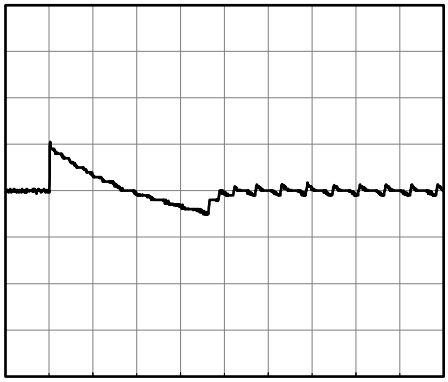

200[mV/div]

2[ms/div]

10[ms/div]

Load 50%(5A) ←→
Load 100%(10A)

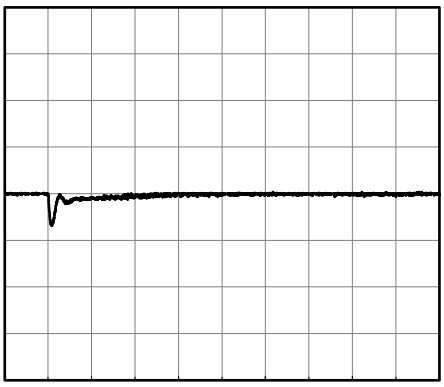

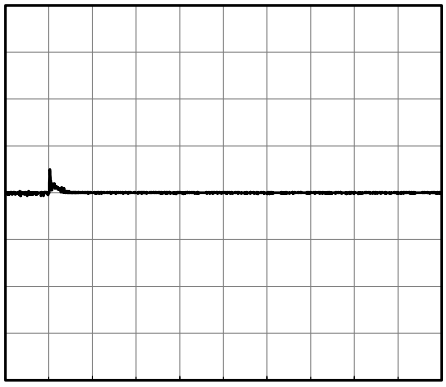

200[mV/div]

2[ms/div]

10[ms/div]

Load 0%(0A) ←→
Load 50%(5A)

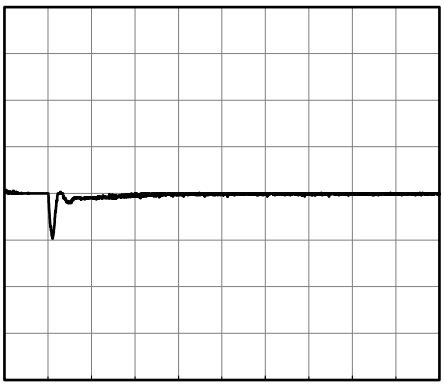

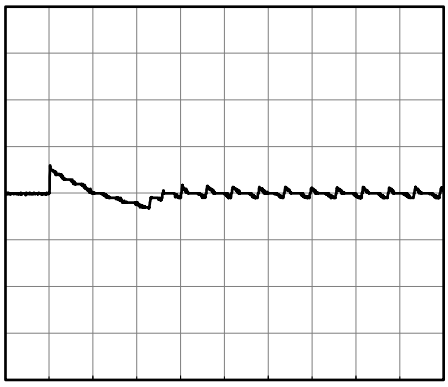

200[mV/div]

2[ms/div]

10[ms/div]

COSEL

Model	PDA50F-5	
Item	Rise and Fall Time	Temperature 25°C Testing Circuitry Figure A
Object	+5V10A	

1.Graph

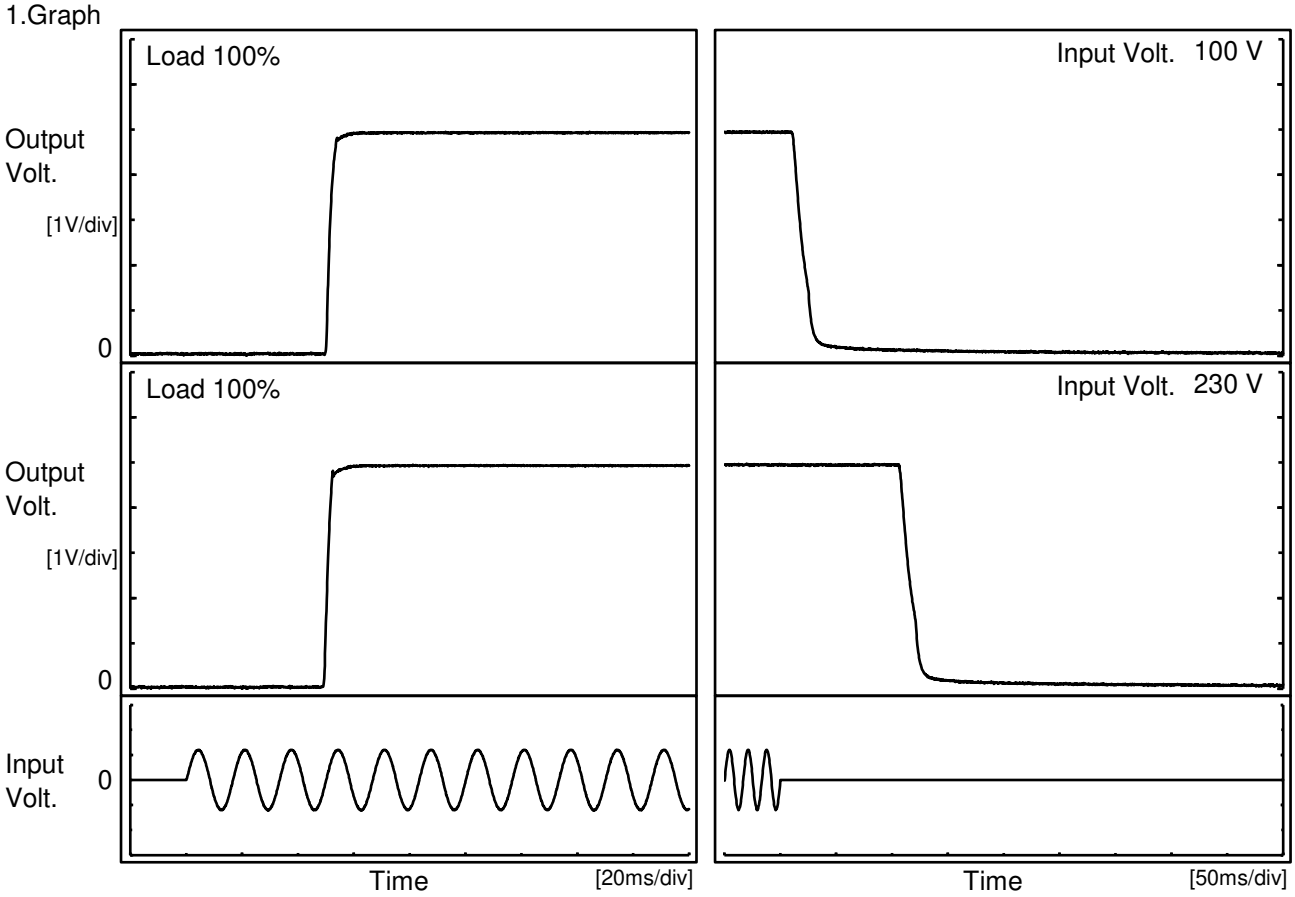

2.Values

[ms]

Input Volt. \ Time	Td	Tr	Ts	Th	Tf
100 V	50.3	3.1	53.4	21.0	17.0
230 V	49.7	2.5	52.2	147.0	17.3

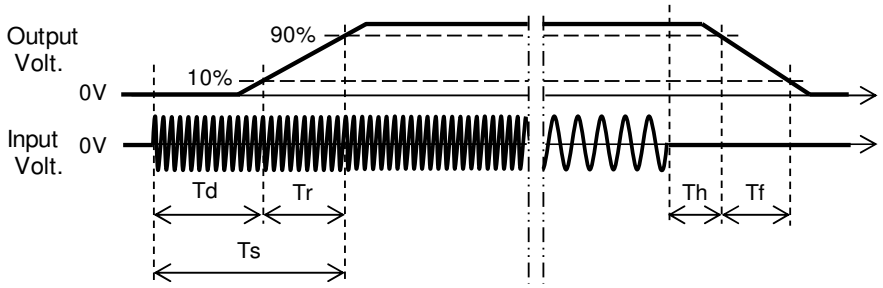

COSEL

Model	PDA50F-5
Item	Hold-Up Time
Object	+5V10A

Temperature 25°C
Testing Circuitry Figure A

1.Graph

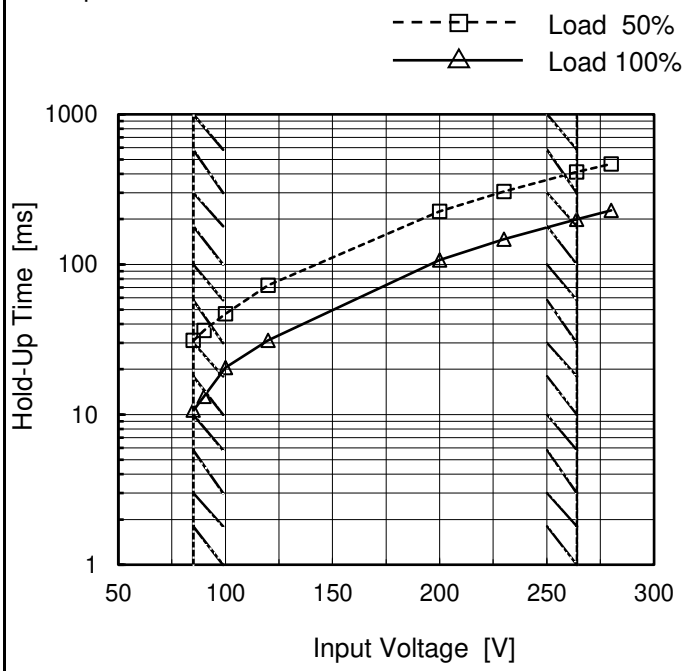

This duration covers from Shut-off of input voltage to the moment when output voltage descends to the rated range of voltage accuracy.
Note: Slanted line shows the range of the rated input voltage.

2.Values

Input Voltage [V]	Hold-Up Time [ms]	
	Load 50%	Load 100%
85	31	11
90	36	13
100	47	21
120	72	31
200	225	107
230	306	147
264	412	200
280	467	229
--	-	-

BC-11959

COSEL

Model	PDA50F-5
Item	Instantaneous Interruption Compensation
Object	+5V10A

Temperature 25°C
Testing Circuitry Figure A

1.Graph

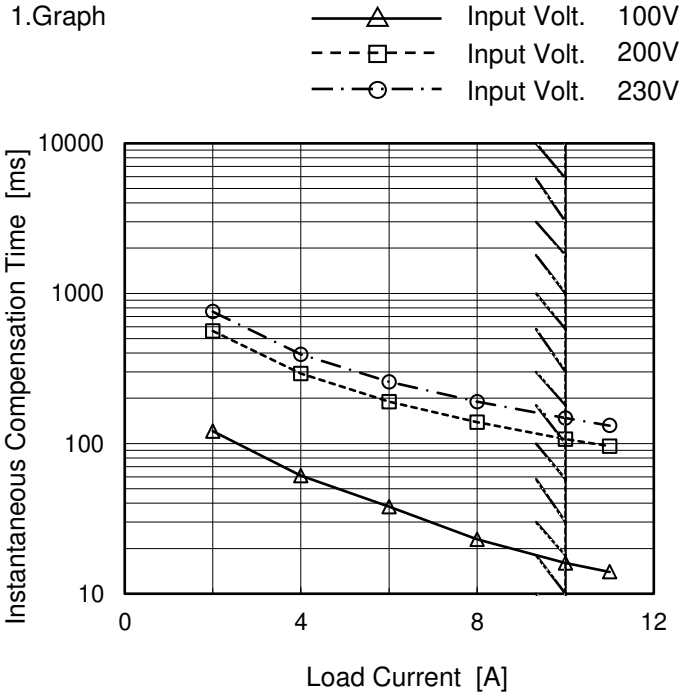

Note: Slanted line shows the range of the rated load current.

2.Values

Load Current [A]	Time [ms]		
	Input Volt. 100[V]	Input Volt. 200[V]	Input Volt. 230[V]
0	-	-	-
2	121	562	757
4	61	292	393
6	38	190	257
8	23	139	190
10	16	107	148
11	14	96	132
--	-	-	-
--	-	-	-
--	-	-	-
--	-	-	-

BC-11959

COSEL

Model	PDA50F-5
Item	Overcurrent Protection
Object	+5V10A

Temperature 25°C
Testing Circuitry Figure A

1.Graph

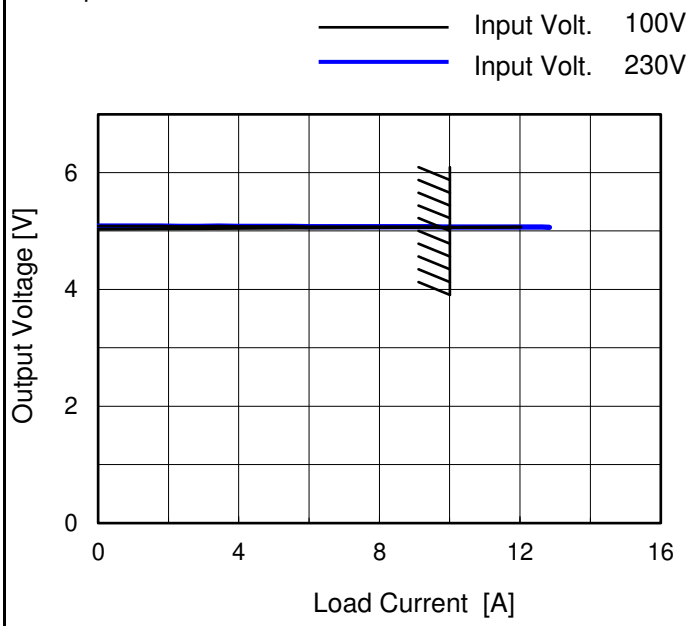

Note: Slanted line shows the range of the rated load current.

Overcurrent protection is Hiccup mode.

2.Values

Output Voltage [V]	Load Current [A]	
	Input Volt. 100[V]	Input Volt. 230[V]
5.00	12.03	12.83
4.75	-	-
4.50	-	-
4.00	-	-
3.50	-	-
3.00	-	-
2.50	-	-
2.00	-	-
1.50	-	-
1.00	-	-
0.50	-	-
0.00	-	-

COSEL

Model	PDA50F-5
Item	Ambient Temperature Drift
Object	+5V10A

Testing Circuitry Figure A

1.Values

Load 100%

Ambient Temperature [°C]	Output Voltage [V]		
	Input Volt. 100V	Input Volt. 200V	Input Volt. 230V
-10	5.057	5.057	5.057
25	5.070	5.071	5.071
50	5.072	5.072	5.072

Item	Minimum Input Voltage for Regulated Output Voltage
Object	+5V10A

Testing Circuitry Figure A

1.Values

Ambient Temperature [°C]	Input Voltage [V]	
	Load 50%	Load 100%
-10	38	58
25	38	58
50	37	58

Item	Overvoltage Protection
Object	+5V10A

Testing Circuitry Figure A

1.Values

Load 0%

Ambient Temperature [°C]	Operating Point [V]	
	Input Volt. 100V	Input Volt. 230V
-20	6.30	6.30
25	6.23	6.23
50	6.23	6.23

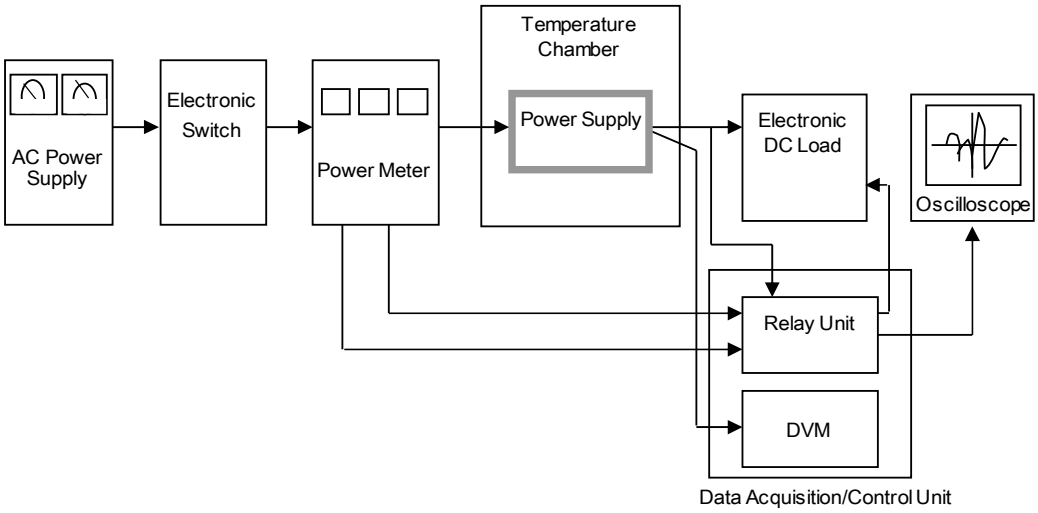

Figure A

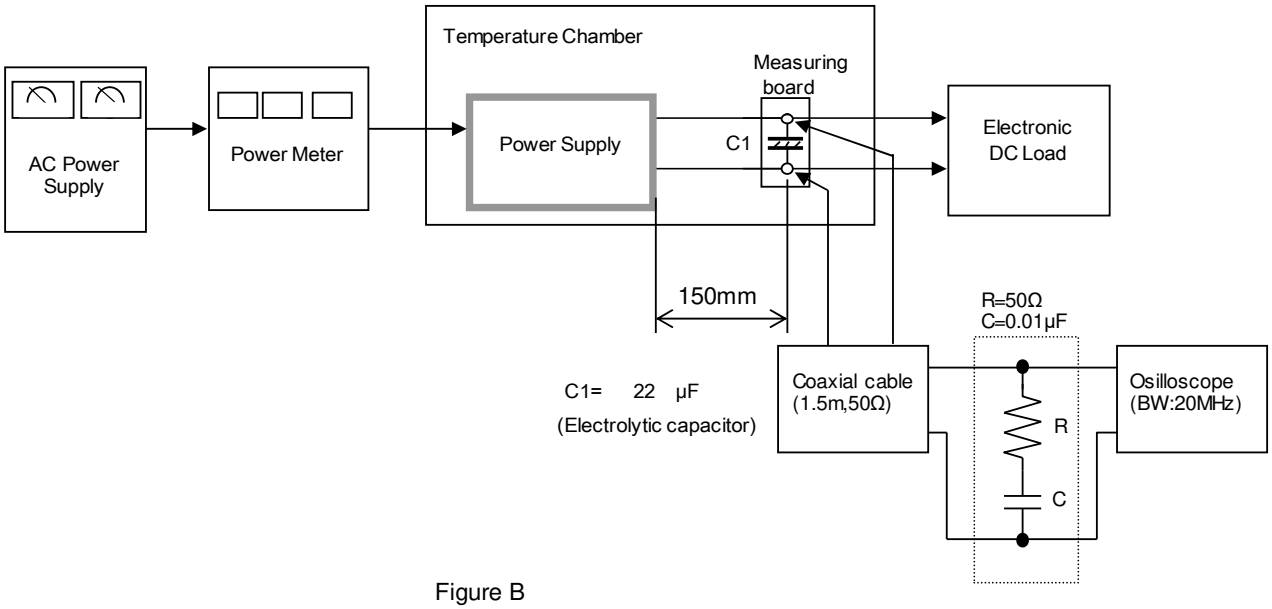

Figure B

COSEL

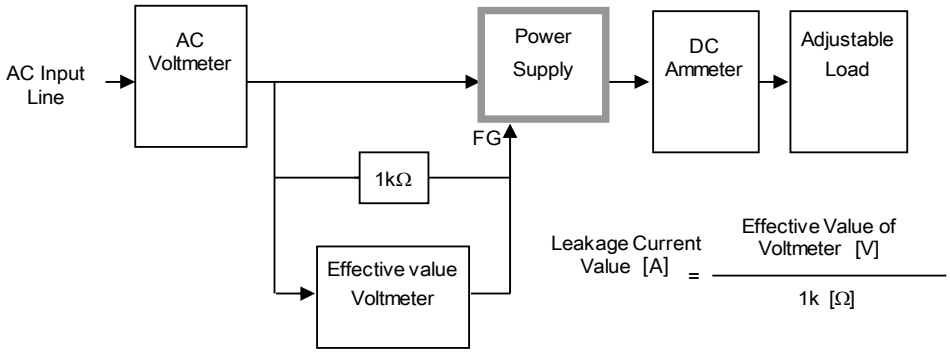

Figure C-1 (DEN-AN)

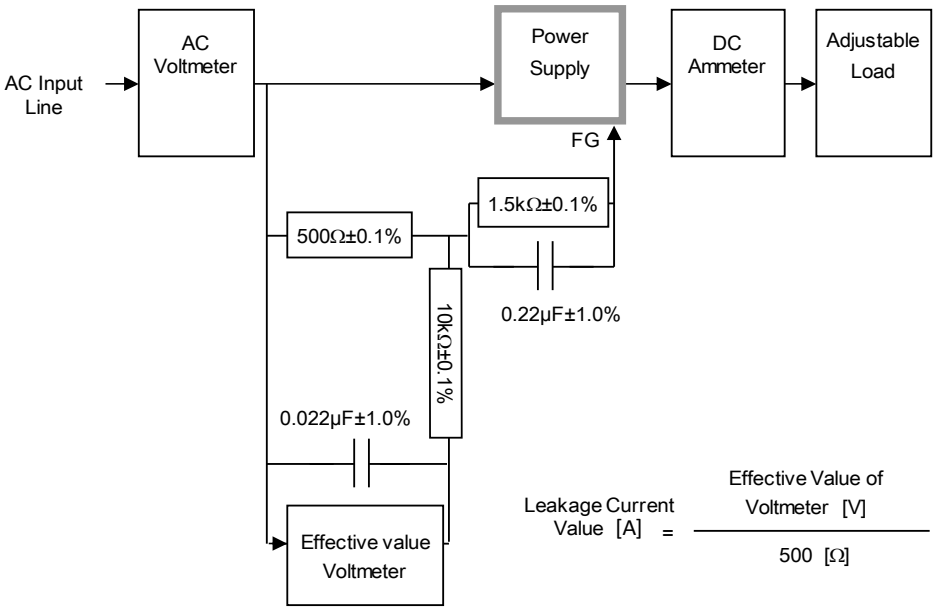

Figure C-2 (IEC62368-1 refer to IEC60990 Fig.4)

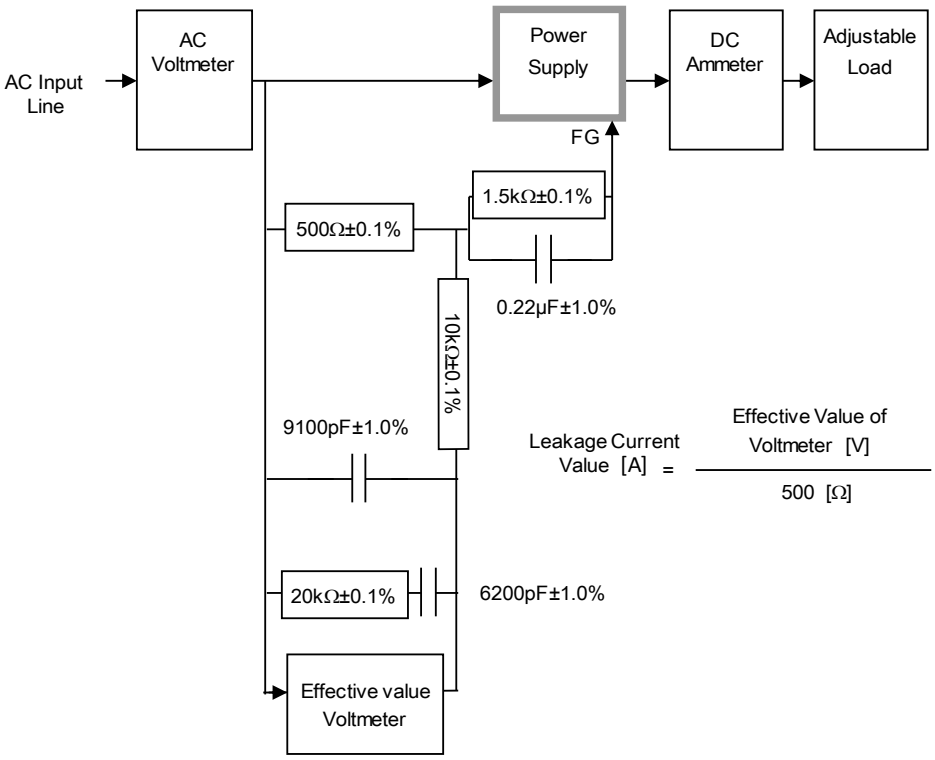

Figure C-3 (IEC62368-1 refer to IEC60990 Fig.5)