For Reference

TEST DATA OF PDA600F-12

Regulated DC Power Supply
May 27, 2025

Approved by : Yoshiaki Shimizu
Design Manager

Prepared by : Terumasa Araki
Design Engineer

COSEL CO.,LTD.

COSEL

CONTENTS

1.Input Current (by Load Current) · 1
2.Efficiency (by Load Current) · 2
3.Power Factor (by Load Current) · 3
4.Inrush Current · 4
5.Leakage Current · 5
6.Line Regulation · 6
7.Load Regulation · 7
8.Ripple-Noise · 7
9.Dynamic Load Response · 8
10.Rise and Fall Time · 9
11.Hold-Up Time · 10
12.Instantaneous Interruption Compensation · · · · · · · · · · · · · · · · · 11
13.Overcurrent Protection · 12
14.Ambient Temperature Drift · 13
15.Minimum Input Voltage for Regulated Output Voltage · · · · · · · · · · 13
16.Overvoltage Protection · 13
17.Figure of Testing Circuitry · 14
(Final Page 15)

COSEL

Model	PDA600F-12
Item	Input Current (by Load Current)
Object	――――――

Temperature 25°C
Testing Circuitry Figure A

1.Graph

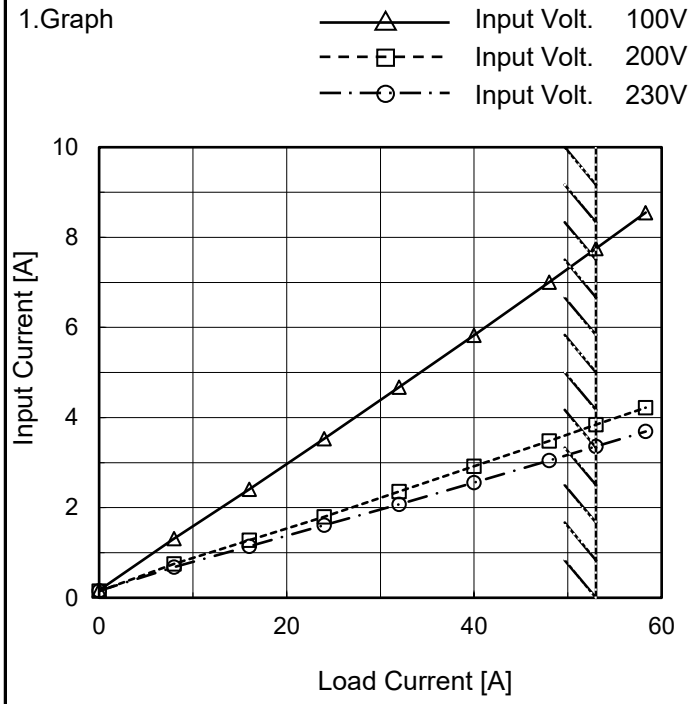

Note: Slanted line shows the range of the rated load current.

2.Values

Load Current [A]	Input Current [A]		
	Input Volt. 100[V]	Input Volt. 200[V]	Input Volt. 230[V]
0.0	0.167	0.145	0.153
8.0	1.311	0.752	0.684
16.0	2.409	1.275	1.142
24.0	3.528	1.793	1.614
32.0	4.671	2.355	2.071
40.0	5.827	2.918	2.557
48.0	7.003	3.483	3.050
53.0	7.750	3.840	3.359
58.3	8.550	4.220	3.690
--	-	-	-
--	-	-	-

COSEL

Model	PDA600F-12
Item	Efficiency (by Load Current)
Object	————————

Temperature 25°C
Testing Circuitry Figure A

1.Graph

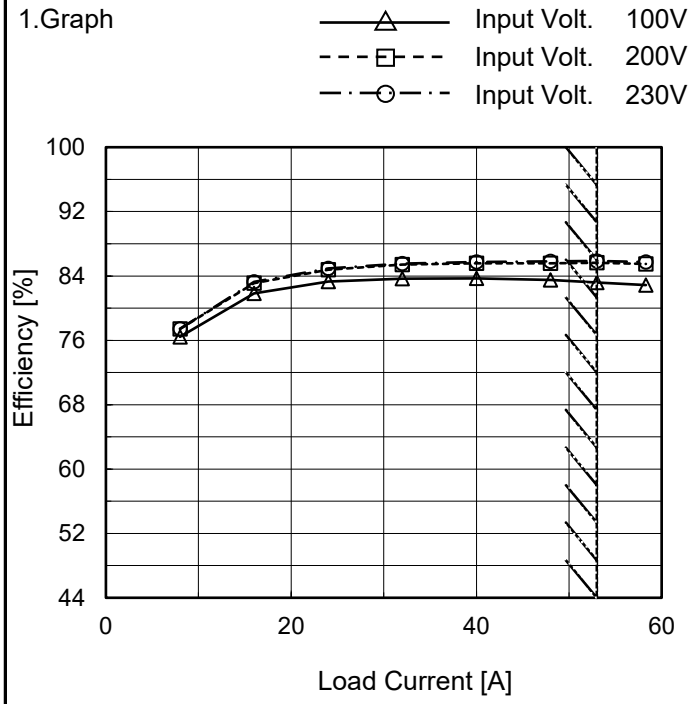

Note: Slanted line shows the range of the rated load current.

2.Values

Load Current [A]	Efficiency [%]		
	Input Volt. 100[V]	Input Volt. 200[V]	Input Volt. 230[V]
0.0	-	-	-
8.0	76.4	77.4	77.4
16.0	81.8	83.1	83.3
24.0	83.3	84.8	84.9
32.0	83.7	85.4	85.5
40.0	83.7	85.6	85.7
48.0	83.5	85.6	85.8
53.0	83.2	85.6	85.9
58.3	82.9	85.5	85.7
--	-	-	-
--	-	-	-

COSEL

Model	PDA600F-12
Item	Power Factor (by Load Current)
Object	————————

Temperature 25°C
Testing Circuitry Figure A

1.Graph

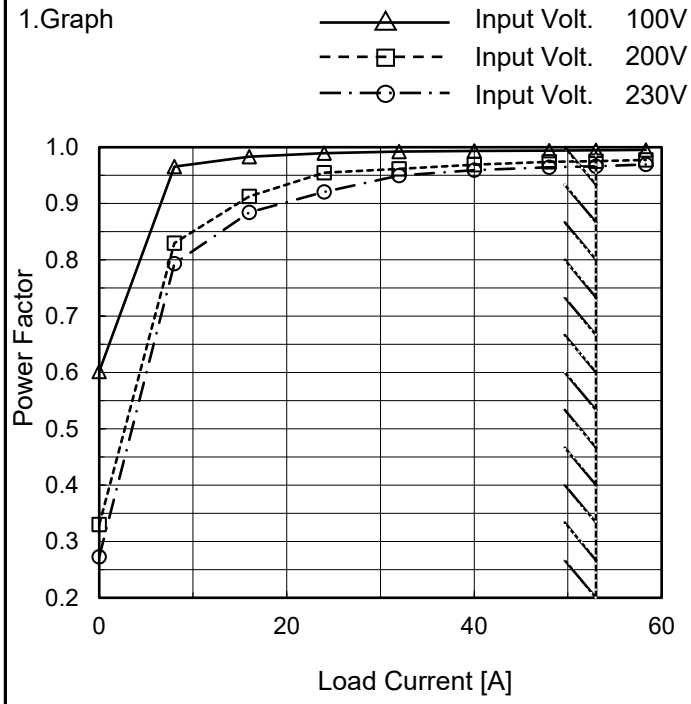

Note: Slanted line shows the range of the rated load current.

2.Values

Load Current [A]	Power Factor		
	Input Volt. 100[V]	Input Volt. 200[V]	Input Volt. 230[V]
0.0	0.602	0.330	0.273
8.0	0.966	0.830	0.794
16.0	0.983	0.913	0.884
24.0	0.989	0.955	0.921
32.0	0.992	0.962	0.950
40.0	0.993	0.969	0.959
48.0	0.994	0.974	0.964
53.0	0.995	0.975	0.966
58.3	0.995	0.977	0.969
--	-	-	-
--	-	-	-

COSEL

Model	PDA600F-12	
Item	Inrush Current	Temperature 25°C Testing Circuitry Figure A
Object	————————	

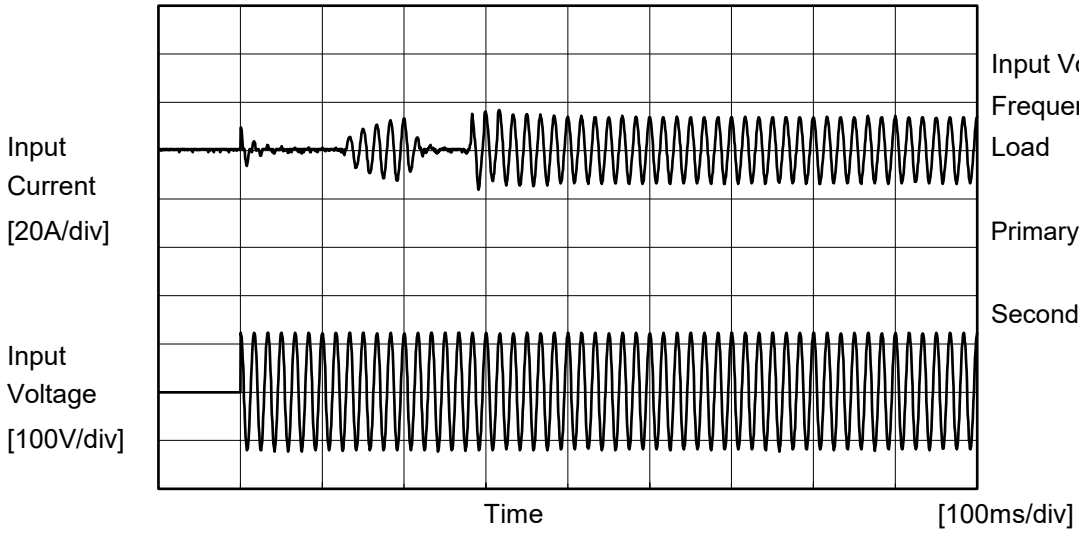

Input Voltage 100 V
Frequency 60 Hz
Load 100 %

Primary inrush current :
9.6 A
Secondary inrush current :
16.8 A

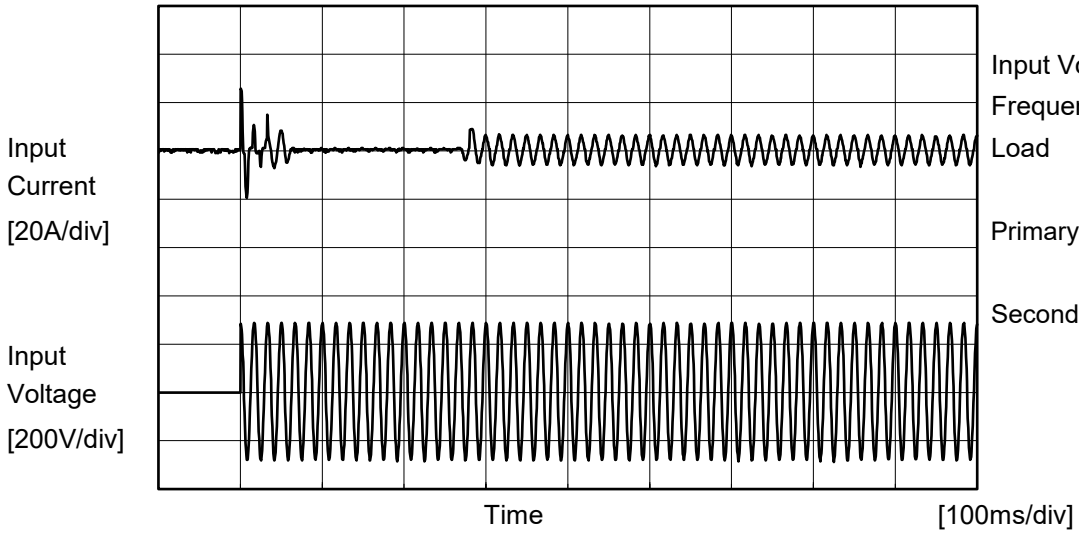

Input Voltage 230 V
Frequency 60 Hz
Load 100 %

Primary inrush current :
25.8 A
Secondary inrush current :
9.0 A

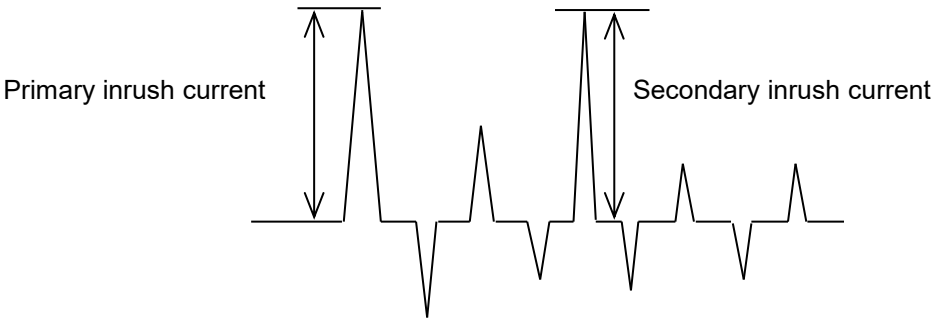

COSEL

Model	PDA600F-12	
Item	Leakage Current	Temperature 25°C Testing Circuitry Figure C
Object	――――――――――――	

1.Results

[mA]

Standards	Testing Circuitry	Measuring Method	Input Volt.			Note
			100 [V]	230 [V]	240 [V]	
DEN-AN	Figure C-1	Both phases	0.16	0.43	0.45	Operation
		One of phases	0.31	0.81	0.85	Stand by
IEC62368-1	Figure C-2	Both phases	0.16	0.42	0.45	Operation
		One of phases	0.31	0.80	0.84	Stand by
	Figure C-3	Both phases	0.16	0.42	0.44	Operation
		One of phases	0.31	0.79	0.83	Stand by

The value for "One of phases" is the reference value only.

2.Condition

Leakage current value is concluded after measuring both phases of AC input and by choosing the larger one.

COSEL

Model	PDA600F-12
Item	Line Regulation
Object	+12V53A

Temperature 25°C
Testing Circuitry Figure A

1.Graph

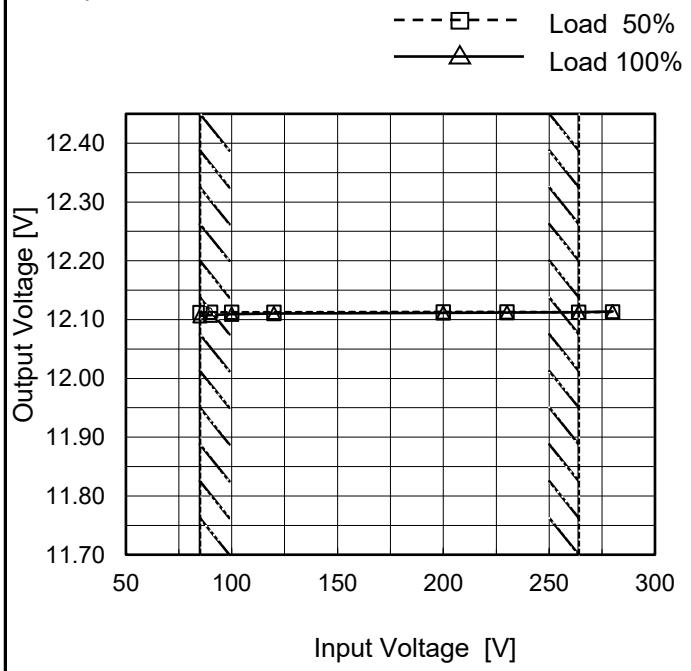

Note: Slanted line shows the range of the rated input voltage.

2.Values

Input Voltage [V]	Output Voltage [V]	
	Load 50%	Load 100%
85	12.112	12.107
90	12.112	12.108
100	12.113	12.109
120	12.113	12.110
200	12.113	12.111
230	12.113	12.112
264	12.113	12.113
280	12.113	12.114
--	-	-

BC-12155

COSEL

Model	PDA600F-12
Item	Load Regulation
Object	+12V53A

Temperature 25°C
Testing Circuitry Figure A

1.Graph

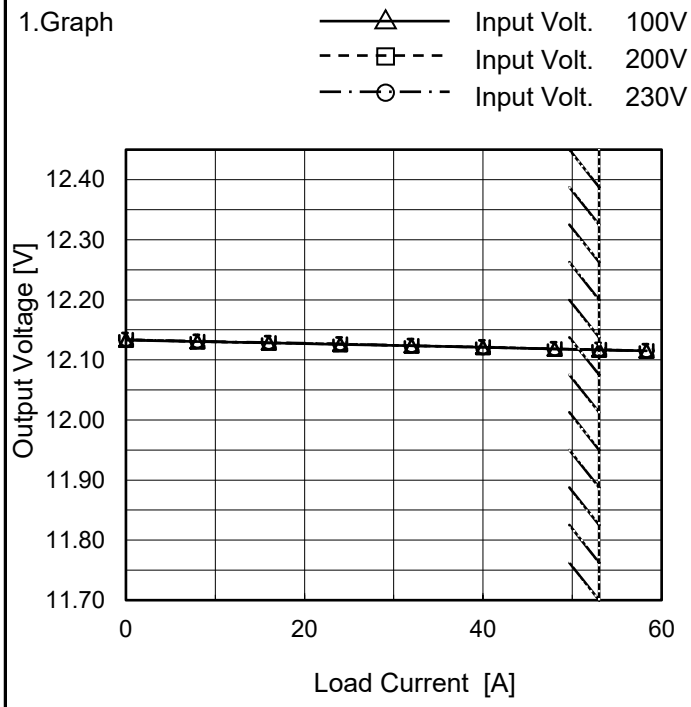

Note: Slanted line shows the range of the rated load current.

2.Values

Load Current [A]	Output Voltage [V]		
	Input Volt. 100[V]	Input Volt. 200[V]	Input Volt. 230[V]
0.0	12.133	12.134	12.134
8.0	12.130	12.131	12.131
16.0	12.128	12.129	12.129
24.0	12.126	12.126	12.127
32.0	12.123	12.124	12.124
40.0	12.121	12.121	12.121
48.0	12.118	12.119	12.118
53.0	12.117	12.117	12.117
58.3	12.115	12.115	12.115
--	--	--	--
--	--	--	--

Item	Ripple-Noise
Object	+12V53A

Temperature 25°C
Testing Circuitry Figure B

1.Graph

Input Voltage 230V
Load 100%

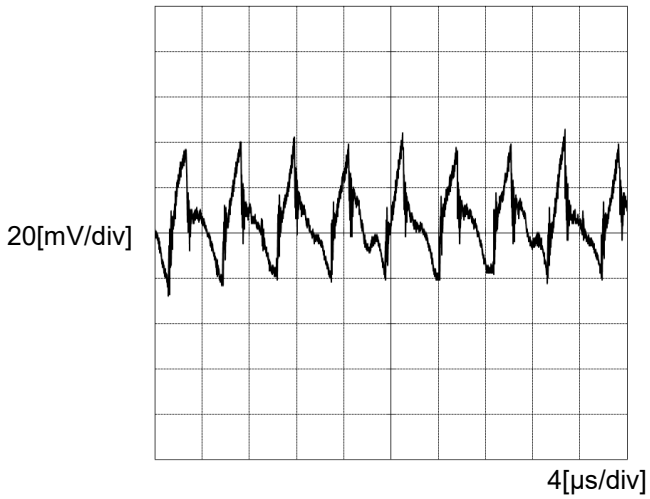

COSEL

Model	PDA600F-12	
Item	Dynamic Load Response	Temperature 25°C Testing Circuitry Figure A
Object	+12V53A	

Input Volt. 230 V

Cycle 1000 ms

Response. t1=t2=50µs. Typ

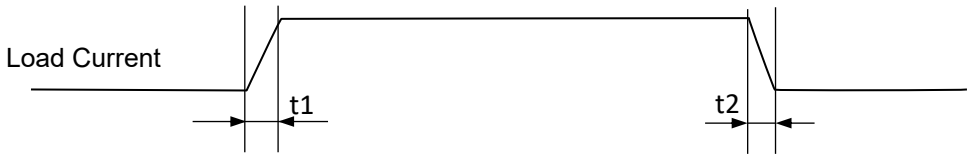

Load 0%(0A) ←→
Load 100%(53A)

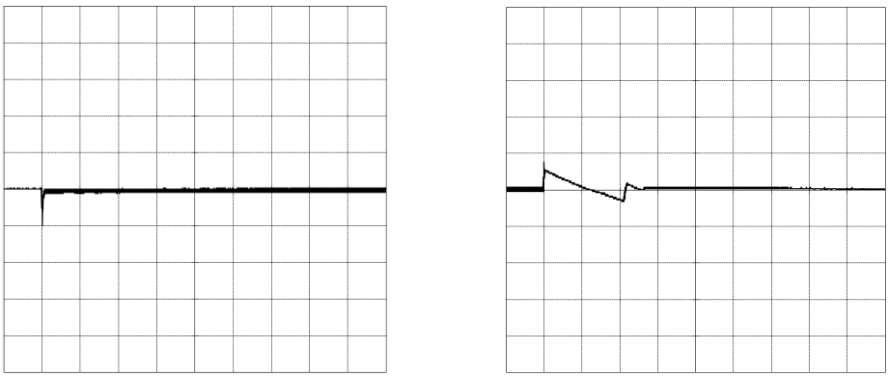

500[mV/div]

20[ms/div] 20[ms/div]

Load 50%(26.5A) ←→
Load 100%(53A)

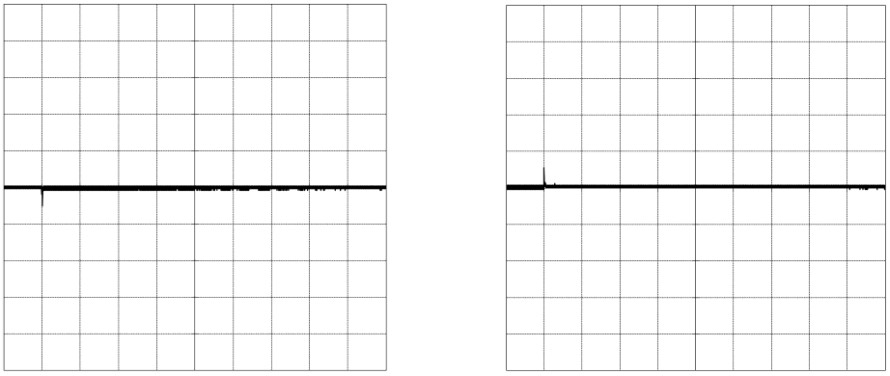

500[mV/div]

20[ms/div] 20[ms/div]

Load %(0A) ←→
Load 50%(26.5A)

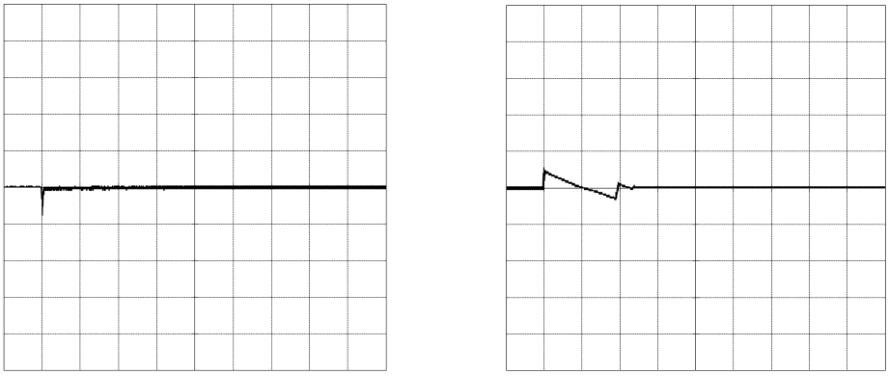

500[mV/div]

20[ms/div] 20[ms/div]

COSEL

Model	PDA600F-12	
Item	Rise and Fall Time	Temperature 25°C Testing Circuitry Figure A
Object	+12V53A	

1.Graph

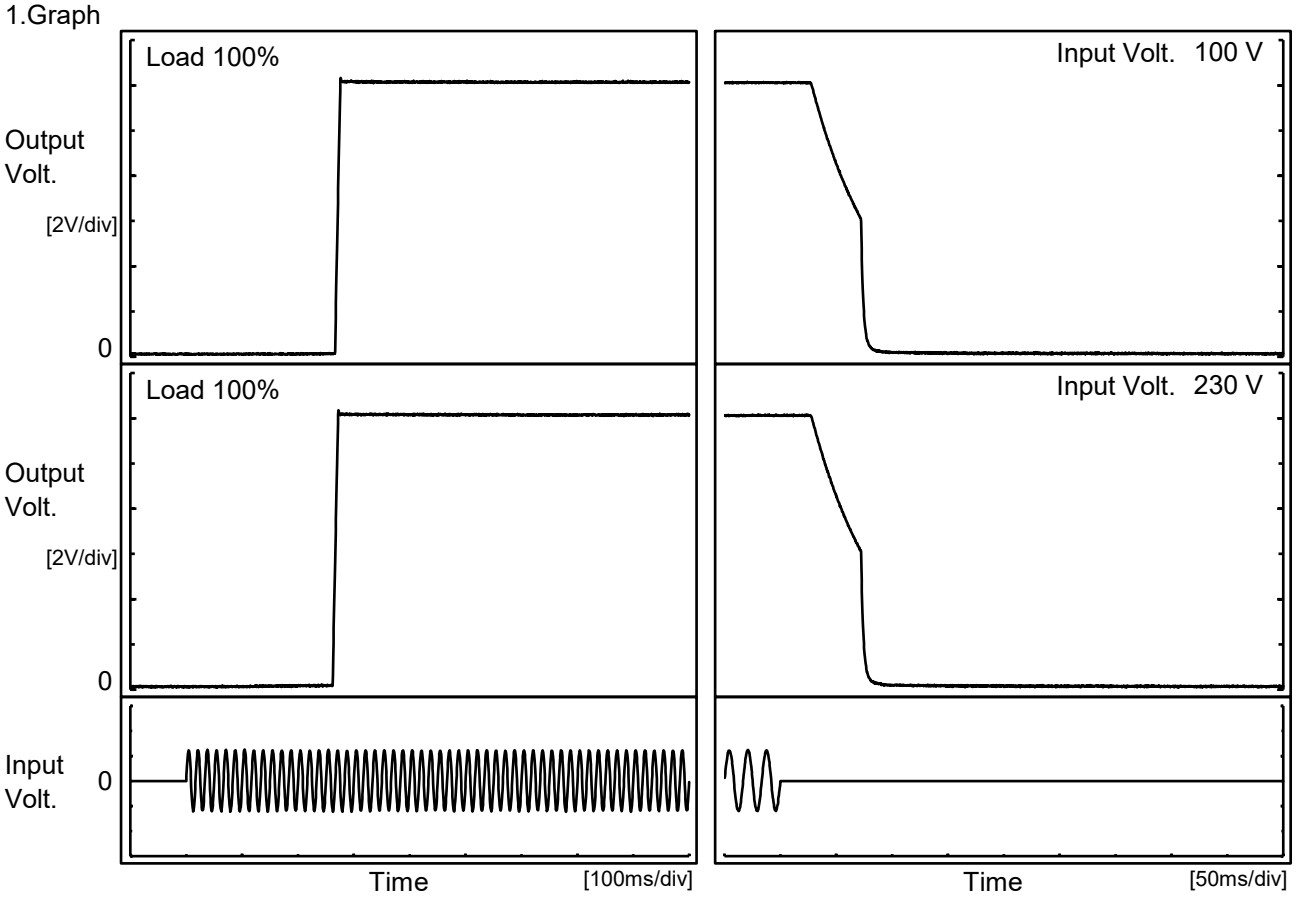

2.Values

[ms]

Input Volt. \ Time	Td	Tr	Ts	Th	Tf
100 V	267.5	7.5	275.0	34.3	41.5
230 V	263.0	8.0	271.0	34.5	41.5

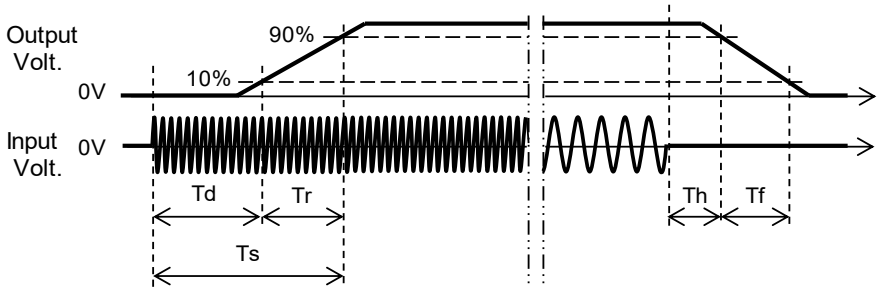

BC-12155

COSEL

Model	PDA600F-12
Item	Hold-Up Time
Object	+12V53A

Temperature 25°C
Testing Circuitry Figure A

1.Graph

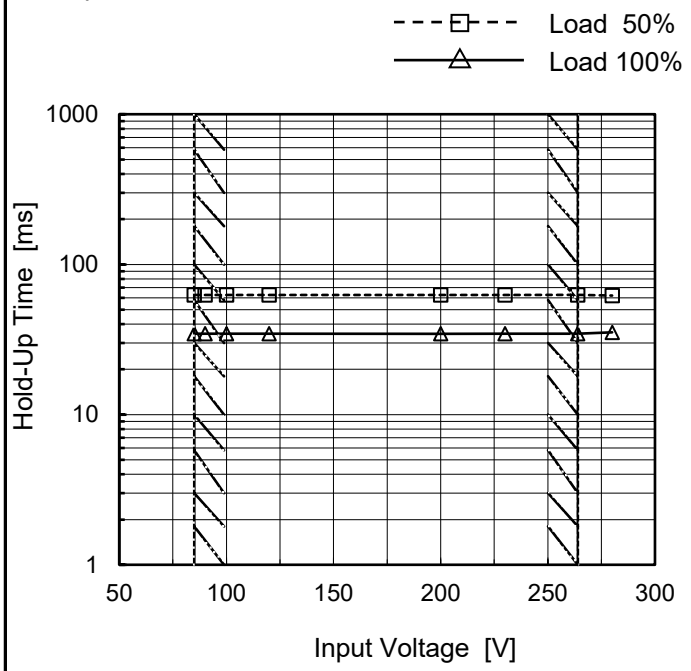

This duration covers from Shut-off of input voltage to the moment when output voltage descends to the rated range of voltage accuracy.
Note: Slanted line shows the range of the rated input voltage.

2.Values

Input Voltage [V]	Hold-Up Time [ms]	
	Load 50%	Load 100%
85	62	35
90	63	35
100	63	35
120	63	35
200	63	35
230	63	35
264	63	35
280	62	35
--	-	-

COSEL

Model	PDA600F-12
Item	Instantaneous Interruption Compensation
Object	+12V53A

Temperature 25°C
Testing Circuitry Figure A

1.Graph

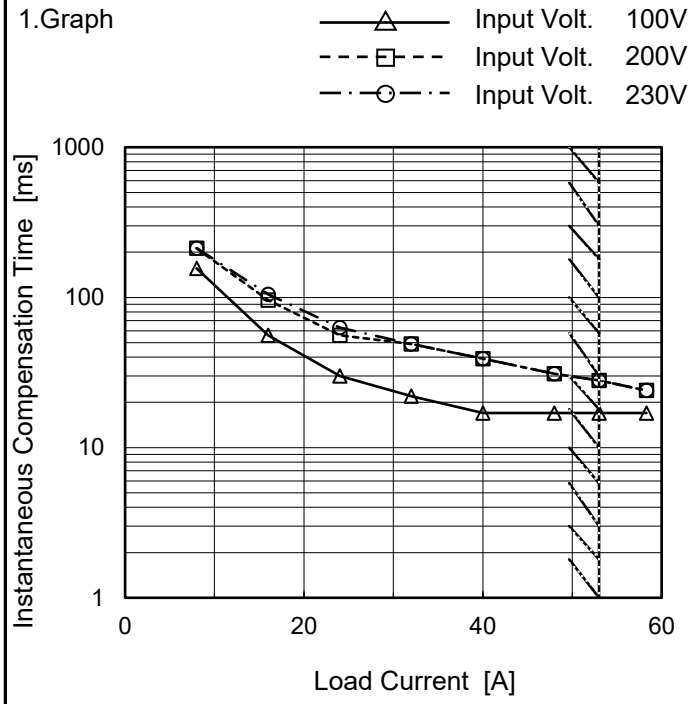

Note: Slanted line shows the range of the rated load current.

2.Values

Load Current [A]	Time [ms]		
	Input Volt. 100[V]	Input Volt. 200[V]	Input Volt. 230[V]
0.0	-	-	-
8.0	156	212	213
16.0	56	96	105
24.0	30	56	63
32.0	22	49	49
40.0	17	39	39
48.0	17	31	31
53.0	17	28	28
58.3	17	24	24
--	-	-	-
--	-	-	-

BC-12155

COSEL

Model	PDA600F-12
Item	Overcurrent Protection
Object	+12V53A

Temperature 25°C
Testing Circuitry Figure A

1.Graph

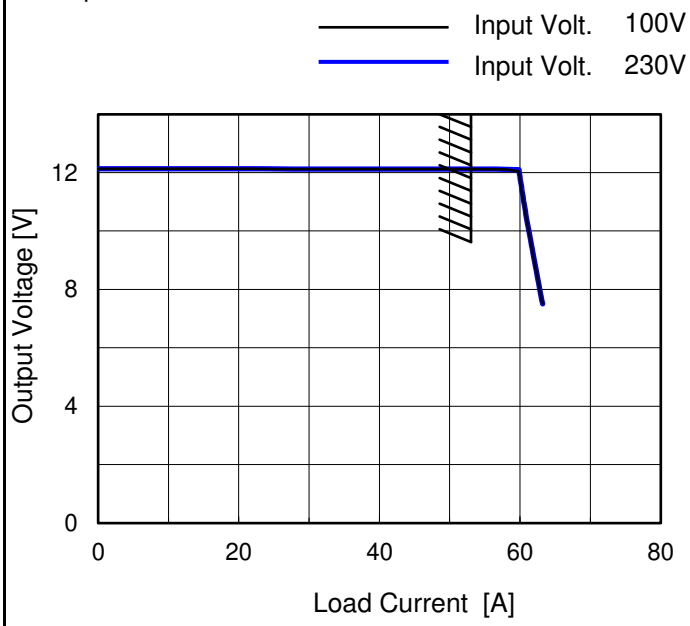

Note: Slanted line shows the range of the rated load current.

Intermittent operation occurs when the output voltage is from 7.2V to 0V.

2.Values

Output Voltage [V]	Load Current [A]	
	Input Volt. 100[V]	Input Volt. 230[V]
11.4	60.21	60.28
10.8	60.62	60.68
9.6	61.51	61.53
8.4	62.45	62.46
7.2	63.19	63.21
--	-	-
--	-	-
--	-	-
--	-	-
--	-	-
--	-	-
--	-	-

COSEL

Model	PDA600F-12	
Item	Ambient Temperature Drift	Testing Circuitry Figure A
Object	+12V53A	

1.Values

Load 100%

Ambient Temperature[℃]	Output Voltage [V]		
	Input Volt. 100V	Input Volt. 200V	Input Volt. 230V
-20	12.064	12.064	12.064
25	12.092	12.092	12.092
50	12.107	12.108	12.108

Item	Minimum Input Voltage for Regulated Output Voltage	Testing Circuitry Figure A
Object	+12V53A	

1.Values

Ambient Temperature[℃]	Input Voltage [V]	
	Load 50%	Load 100%
-20	67	68
25	67	68
50	67	69

Item	Overvoltage Protection	Testing Circuitry Figure A
Object	+12V53A	

1.Values

Load 0%

Ambient Temperature[℃]	Operating Point [V]	
	Input Volt. 100V	Input Volt. 230V
-20	17.17	17.16
25	17.28	17.27
50	17.28	17.28

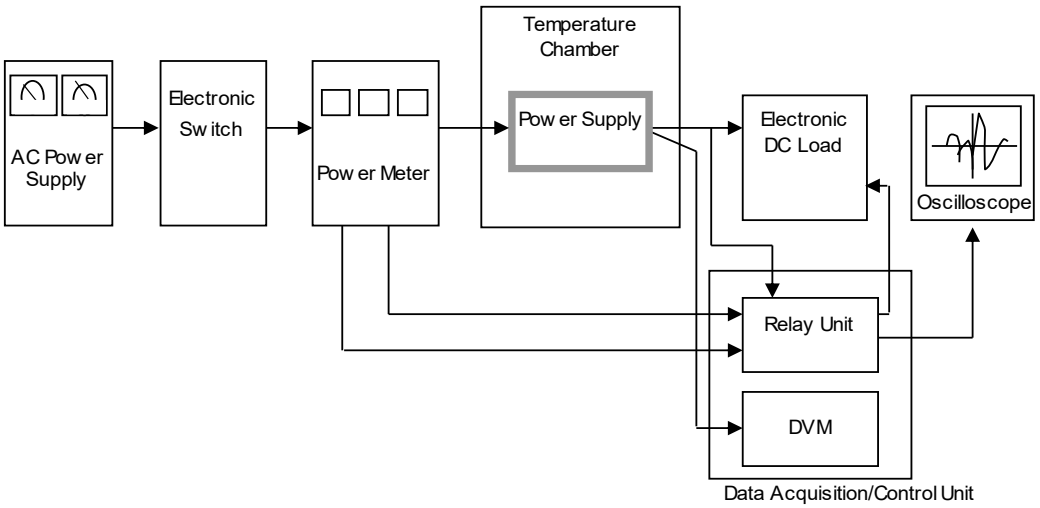

Figure A

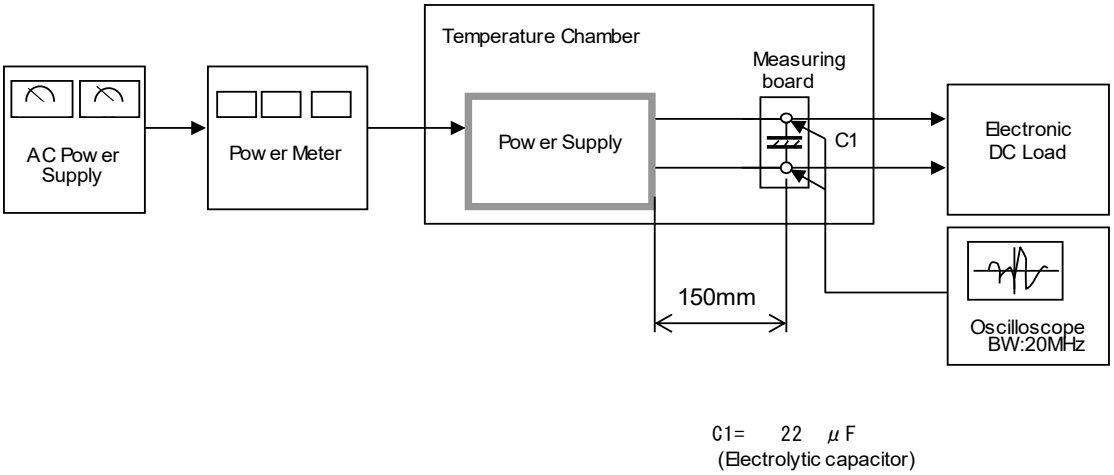

Figure B

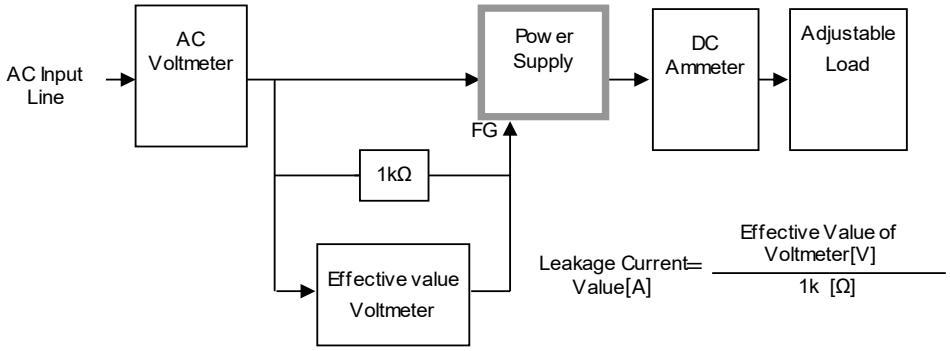

Figure C-1 (DEN-AN)

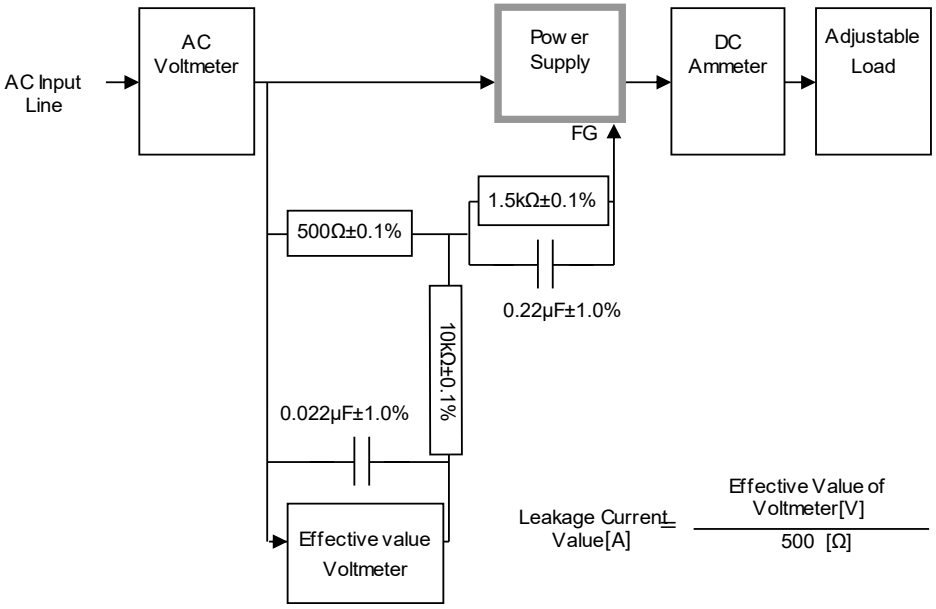

Figure C-2 (IEC62368-1 refer to IEC60990 Fig.4)

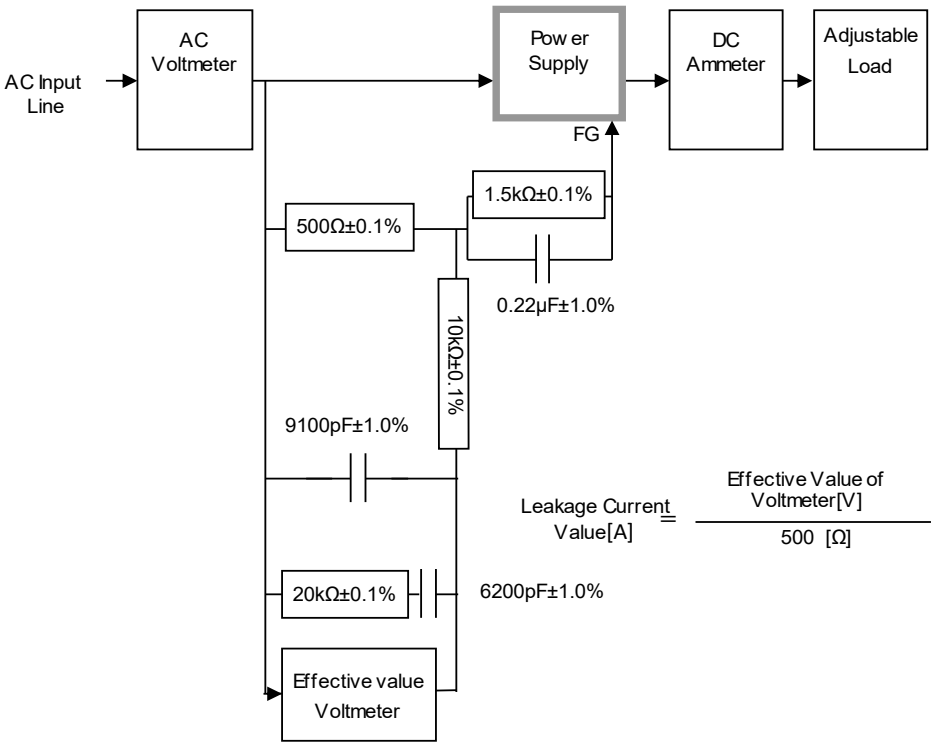

Figure C-3 (IEC62368-1 refer to IEC60990 Fig.5)