For Reference

COSEL

TEST DATA OF PDA600F-3R3

Regulated DC Power Supply
November 28, 2025

Approved by : Yoshiaki Shimizu
Design Manager

Prepared by : Fangcheng Zhong
Design Engineer

COSEL CO.,LTD.

COSEL

CONTENTS

1.Input Current (by Load Current) · 1
2.Efficiency (by Load Current) · 2
3.Power Factor (by Load Current) · 3
4.Inrush Current · 4
5.Leakage Current · 5
6.Line Regulation · 6
7.Load Regulation · 7
8.Ripple-Noise · 7
9.Dynamic Load Response · 8
10.Rise and Fall Time · 9
11.Hold-Up Time · 10
12.Instantaneous Interruption Compensation · · · · · · · · · · · · · · · · · 11
13.Overcurrent Protection · 12
14.Ambient Temperature Drift · 13
15.Minimum Input Voltage for Regulated Output Voltage · · · · · · · · · · 13
16.Overvoltage Protection · 13
17.Figure of Testing Circuitry · 14
(Final Page 15)

COSEL

Model	PDA600F-3R3
Item	Input Current (by Load Current)
Object	————————

Temperature 25°C
Testing Circuitry Figure A

1.Graph

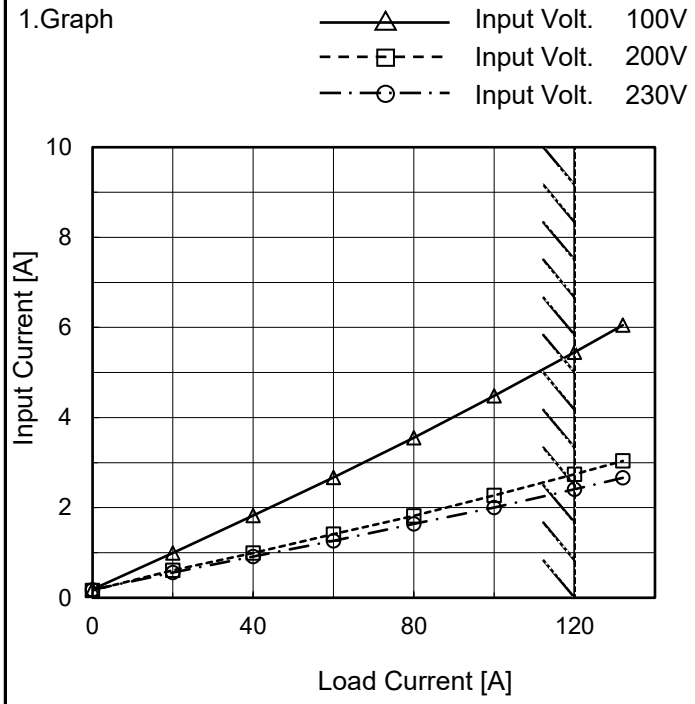

Note: Slanted line shows the range of the rated load current.

2.Values

Load Current [A]	Input Current [A]		
	Input Volt. 100[V]	Input Volt. 200[V]	Input Volt. 230[V]
0	0.187	0.165	0.177
20	0.990	0.608	0.557
40	1.824	0.992	0.917
60	2.669	1.411	1.261
80	3.550	1.817	1.638
100	4.480	2.272	2.006
120	5.450	2.744	2.407
132	6.050	3.037	2.662
--	-	-	-
--	-	-	-
--	-	-	-

BC-12180

COSEL

Model	PDA600F-3R3
Item	Efficiency (by Load Current)
Object	————————

Temperature 25°C
Testing Circuitry Figure A

1.Graph

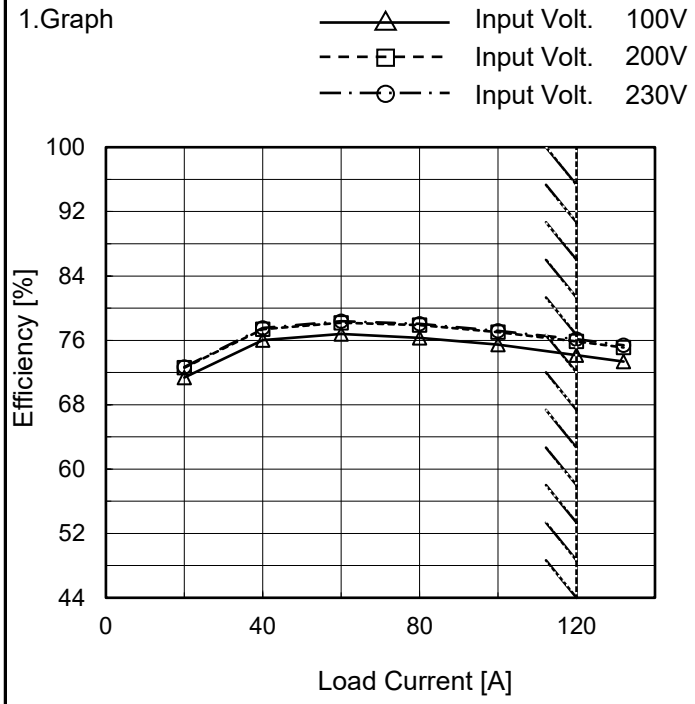

Note: Slanted line shows the range of the rated load current.

2.Values

Load Current [A]	Efficiency [%]		
	Input Volt. 100[V]	Input Volt. 200[V]	Input Volt. 230[V]
0	-	-	-
20	71.4	72.6	72.7
40	76.0	77.4	77.5
60	76.8	78.2	78.4
80	76.3	77.9	78.1
100	75.4	77.0	77.2
120	74.2	75.9	76.1
132	73.4	75.1	75.4
--	-	-	-
--	-	-	-
--	-	-	-

COSEL

Model	PDA600F-3R3
Item	Power Factor (by Load Current)
Object	――――――――

Temperature 25°C
Testing Circuitry Figure A

1.Graph

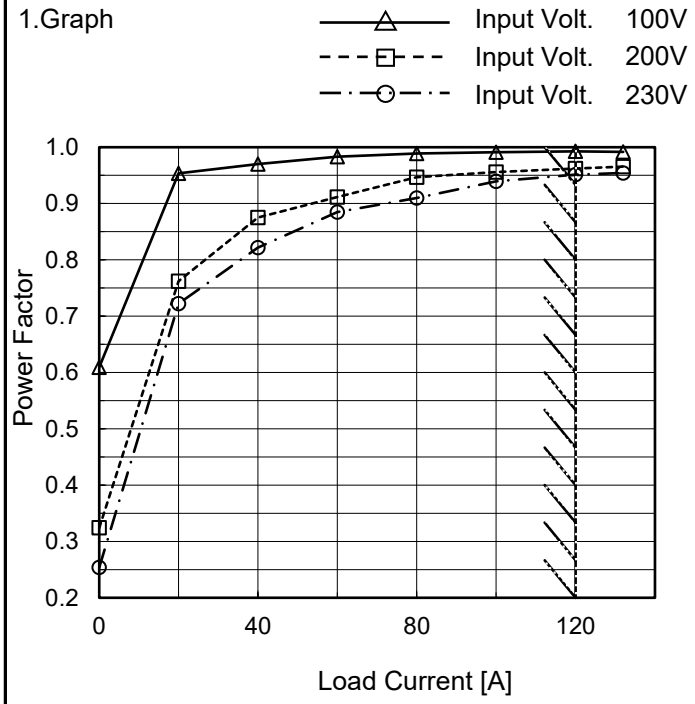

Note: Slanted line shows the range of the rated load current.

2.Values

Load Current [A]	Power Factor		
	Input Volt. 100[V]	Input Volt. 200[V]	Input Volt. 230[V]
0	0.609	0.324	0.254
20	0.953	0.762	0.722
40	0.970	0.875	0.822
60	0.983	0.912	0.885
80	0.989	0.947	0.910
100	0.991	0.956	0.939
120	0.993	0.962	0.951
132	0.992	0.966	0.954
--	-	-	-
--	-	-	-
--	-	-	-

COSEL

Model	PDA600F-3R3	
Item	Inrush Current	Temperature 25°C Testing Circuitry Figure A
Object	————————	

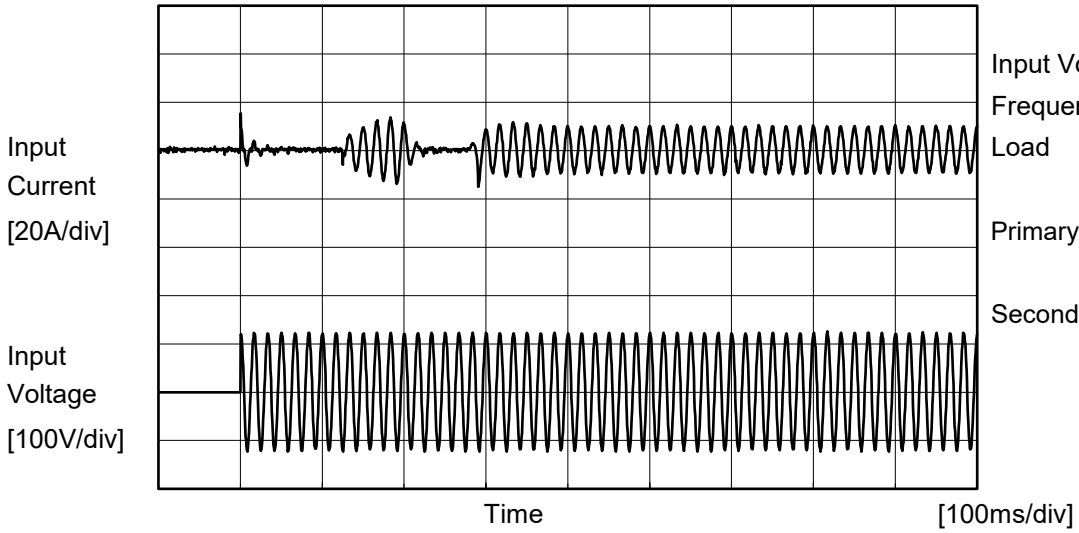

Input Voltage 100 V
Frequency 60 Hz
Load 100 %

Primary inrush current : 15.5 A
Secondary inrush current : 15.0 A

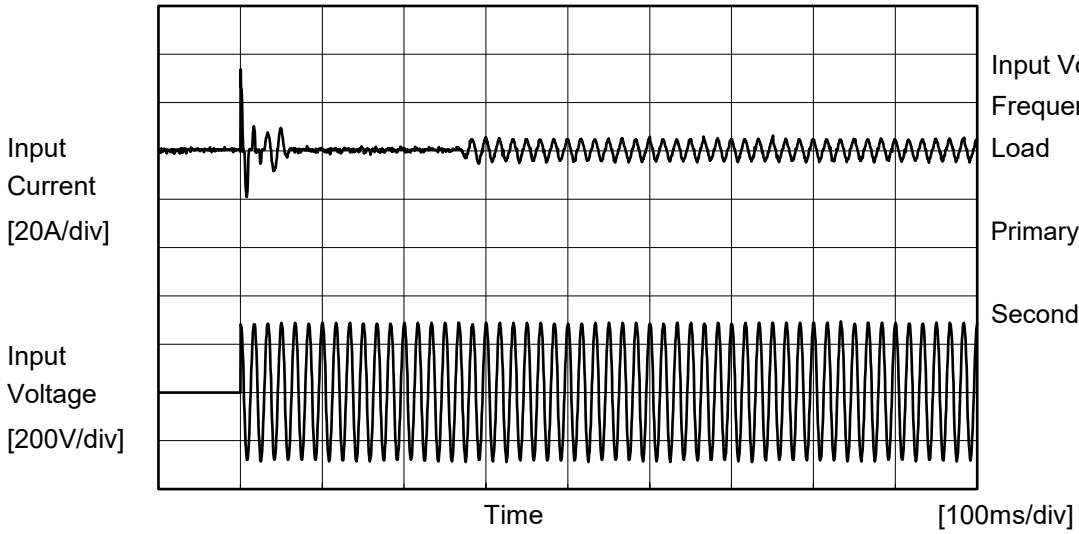

Input Voltage 230 V
Frequency 60 Hz
Load 100 %

Primary inrush current : 33.8 A
Secondary inrush current : 8.9 A

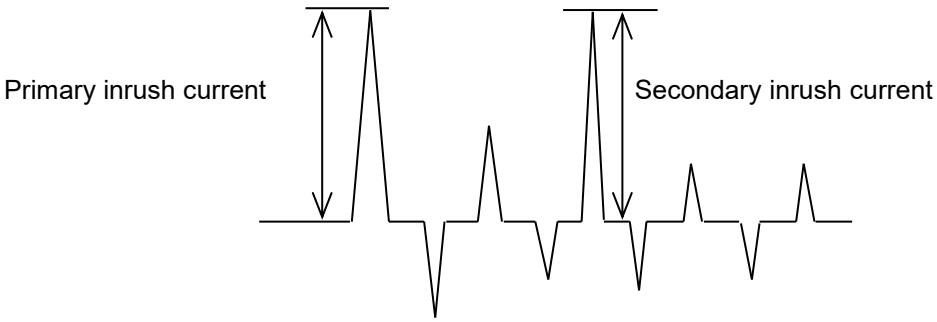

COSEL

Model	PDA600F-3R3	
Item	Leakage Current	Temperature 25°C Testing Circuitry Figure C
Object	――――――――――――	

1.Results

[mA]

Standards	Testing Circuitry	Measuring Method	Input Volt.			Note
			100 [V]	230 [V]	240 [V]	
DEN-AN	Figure C-1	Both phases	0.16	0.43	0.45	Operation
		One of phases	0.31	0.81	0.85	Stand by
IEC62368-1	Figure C-2	Both phases	0.16	0.42	0.45	Operation
		One of phases	0.31	0.80	0.84	Stand by
	Figure C-3	Both phases	0.16	0.42	0.44	Operation
		One of phases	0.31	0.79	0.83	Stand by

The value for "One of phases" is the reference value only.

2.Condition

Leakage current value is concluded after measuring both phases of AC input and by choosing the larger one.

COSEL

Model	PDA600F-3R3
Item	Line Regulation
Object	+3.3V120A

Temperature 25°C
Testing Circuitry Figure A

1.Graph

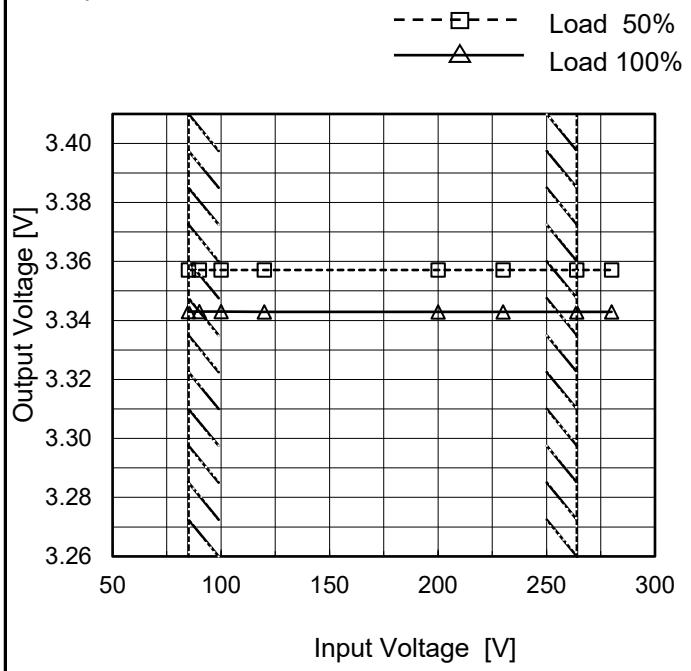

Note: Slanted line shows the range of the rated input voltage.

2.Values

Input Voltage [V]	Output Voltage [V]	
	Load 50%	Load 100%
85	3.357	3.343
90	3.357	3.343
100	3.357	3.343
120	3.357	3.343
200	3.357	3.343
230	3.357	3.343
264	3.357	3.343
280	3.357	3.343
--	-	-

COSEL

Model	PDA600F-3R3
Item	Load Regulation
Object	+3.3V120A

Temperature 25°C
Testing Circuitry Figure A

1.Graph

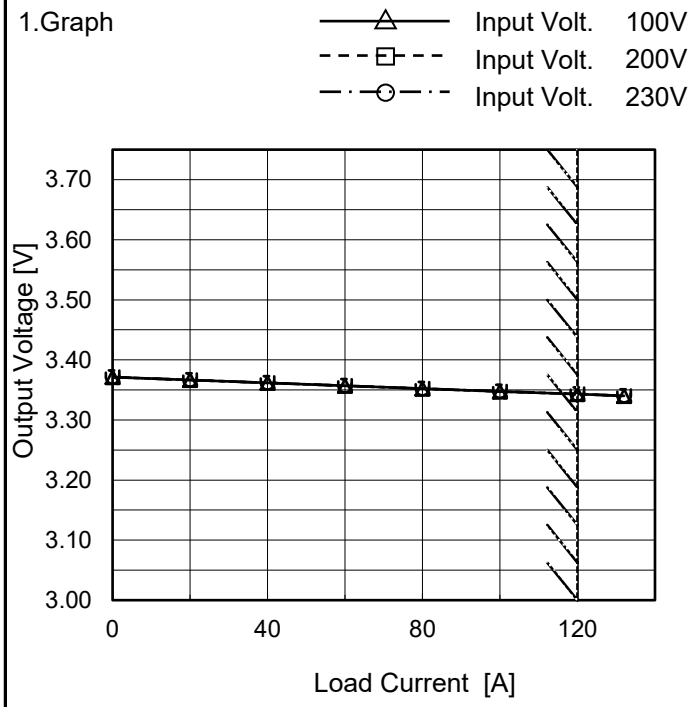

Note: Slanted line shows the range of the rated load current.

2.Values

Load Current [A]	Output Voltage [V]		
	Input Volt. 100[V]	Input Volt. 200[V]	Input Volt. 230[V]
0	3.371	3.371	3.371
20	3.367	3.367	3.367
40	3.362	3.362	3.362
60	3.357	3.357	3.357
80	3.352	3.352	3.352
100	3.348	3.348	3.348
120	3.343	3.343	3.343
132	3.340	3.340	3.340
--	--	--	--
--	--	--	--
--	--	--	--

Item	Ripple-Noise
Object	+3.3V120A

Temperature 25°C
Testing Circuitry Figure B

1.Graph

Input Voltage 230V
Load 100%

20[mV/div]

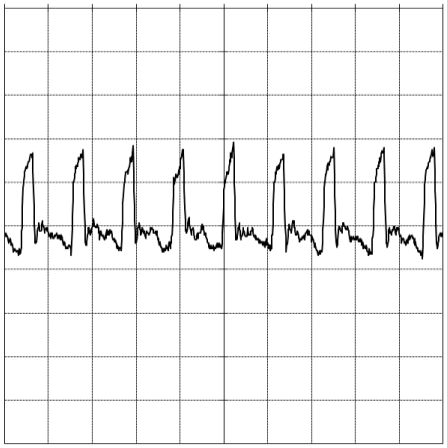

4[μs/div]

COSEL

Model	PDA600F-3R3	
Item	Dynamic Load Response	Temperature 25°C Testing Circuitry Figure A
Object	+3.3V120A	

Input Volt. 230 V
Cycle 1000 ms

Response. t1=t2=50µs. Typ

Load 0%(0A) ←→
Load 100%(120A)

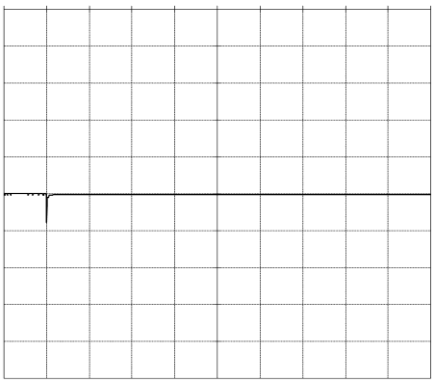

500[mV/div]
10[ms/div]

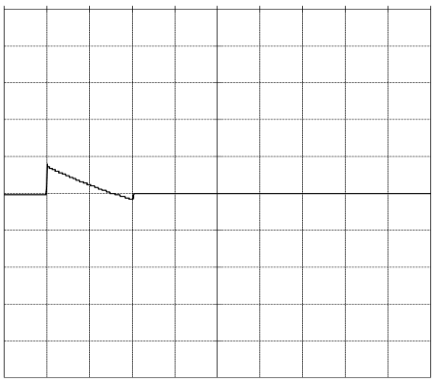

10[ms/div]

Load 50%(60A) ←→
Load 100%(120A)

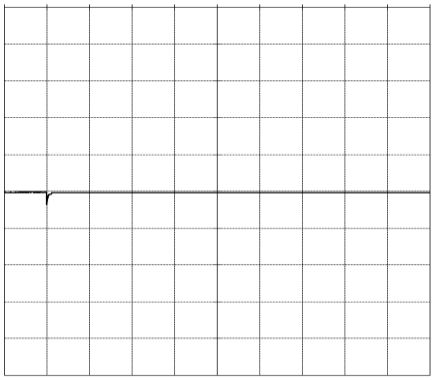

500[mV/div]
10[ms/div]

10[ms/div]

Load 0%(0A) ←→
Load 50%(60A)

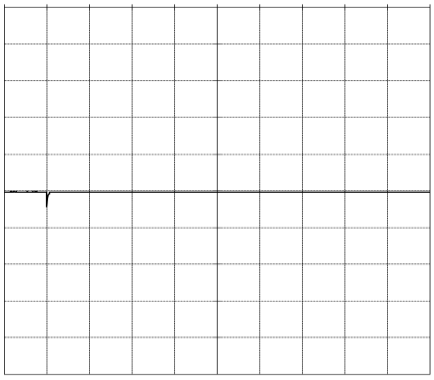

500[mV/div]
10[ms/div]

10[ms/div]

COSEL

Model	PDA600F-3R3	
Item	Rise and Fall Time	Temperature 25°C Testing Circuitry Figure A
Object	+3.3V120A	

1.Graph

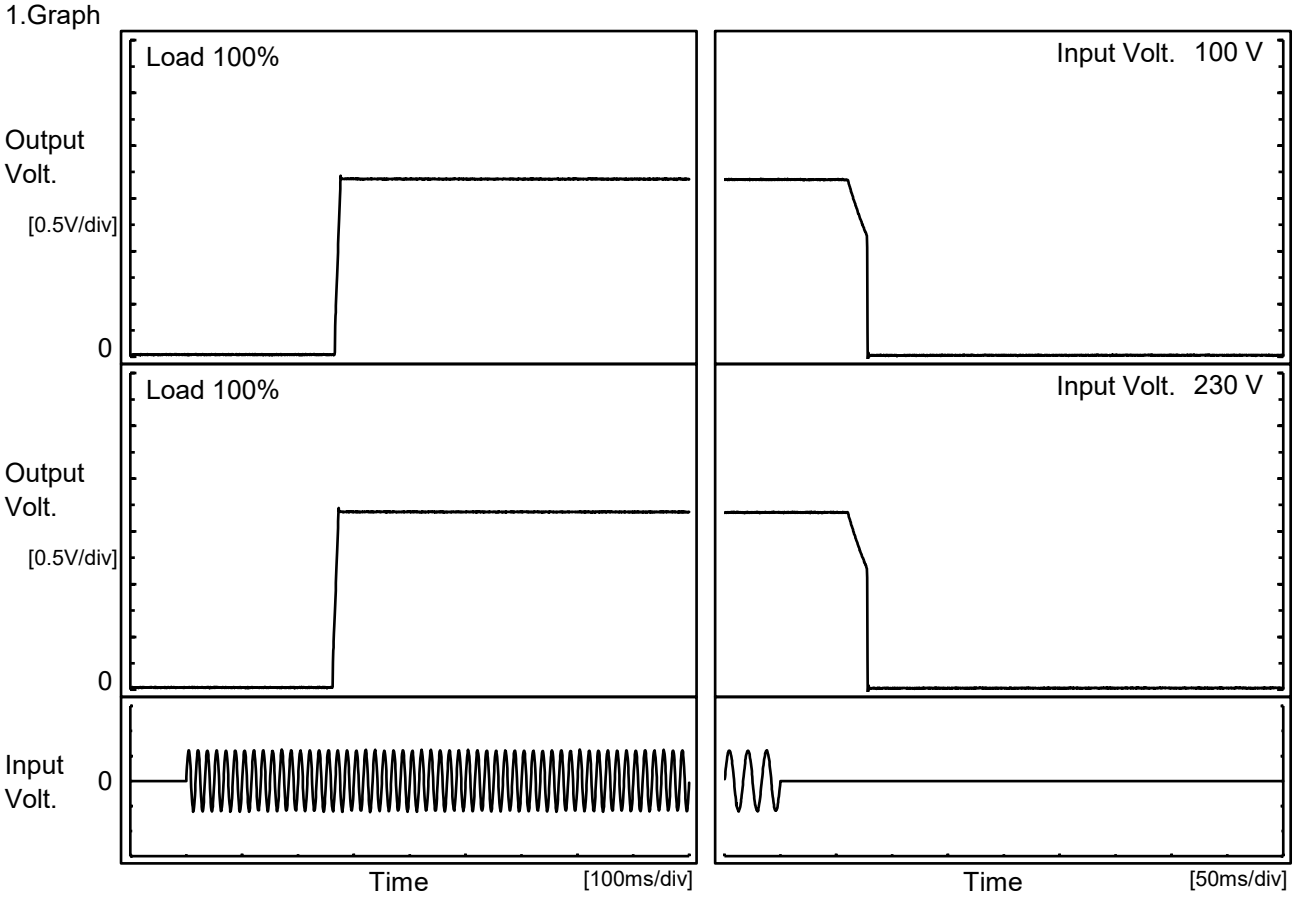

2.Values

[ms]

Input Volt. \ Time	Td	Tr	Ts	Th	Tf
100 V	266.5	8.5	275.0	65.3	12.8
230 V	262.5	9.0	271.5	65.5	12.5

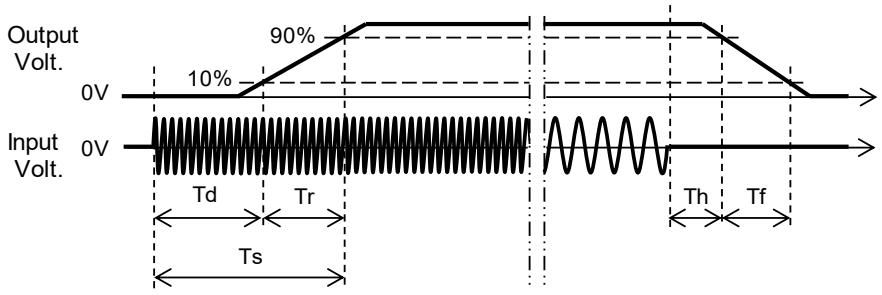

BC-12180

COSEL

Model	PDA600F-3R3
Item	Hold-Up Time
Object	+3.3V120A

Temperature 25°C
Testing Circuitry Figure A

1.Graph

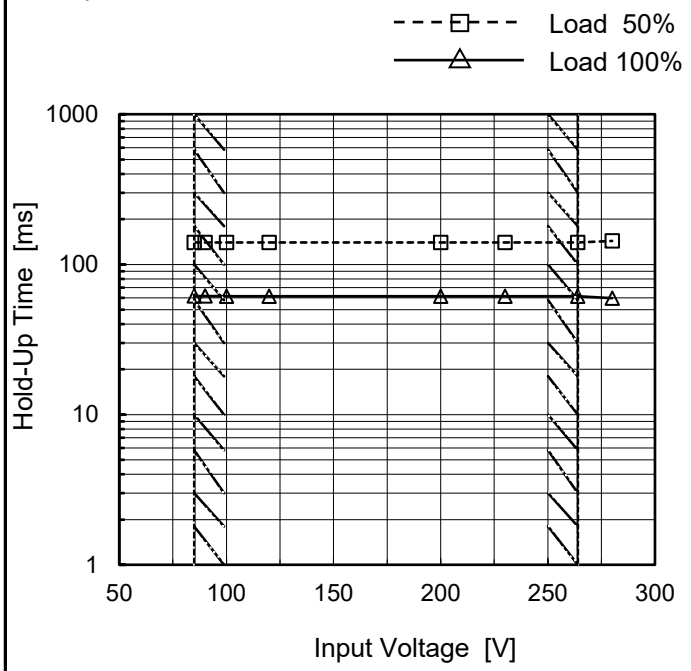

This duration covers from Shut-off of input voltage to the moment when output voltage descends to the rated range of voltage accuracy.
Note: Slanted line shows the range of the rated input voltage.

2.Values

Input Voltage [V]	Hold-Up Time [ms]	
	Load 50%	Load 100%
85	140	62
90	140	62
100	140	62
120	140	62
200	140	62
230	140	62
264	140	61
280	143	60
--	-	-

COSEL

Model	PDA600F-3R3
Item	Instantaneous Interruption Compensation
Object	+3.3V120A

Temperature 25°C
Testing Circuitry Figure A

1.Graph

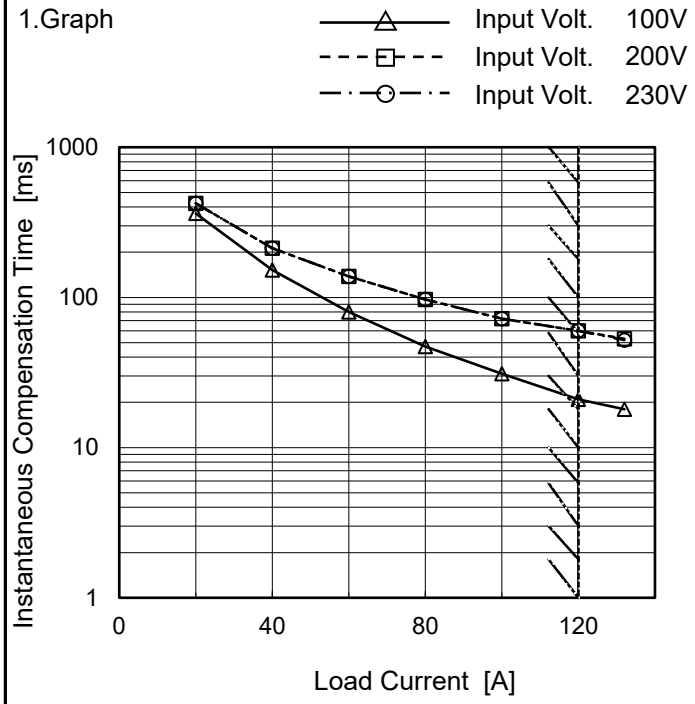

Note: Slanted line shows the range of the rated load current.

2.Values

Load Current [A]	Time [ms]		
	Input Volt. 100[V]	Input Volt. 200[V]	Input Volt. 230[V]
0	-	-	-
20	362	423	423
40	152	213	213
60	80	138	138
80	47	97	97
100	31	72	72
120	21	60	60
132	18	53	52
--	-	-	-
--	-	-	-
--	-	-	-

COSEL

Model	PDA600F-3R3
Item	Overcurrent Protection
Object	+3.3V120A

Temperature 25°C
Testing Circuitry Figure A

1.Graph

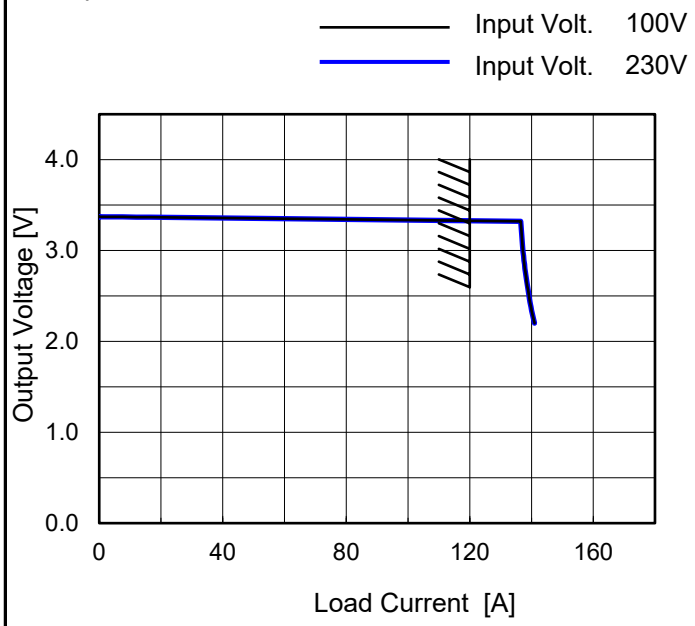

Note: Slanted line shows the range of the rated load current.

Intermittent operation occurs when the output voltage is from 2.31V to 0V.

2.Values

Output Voltage [V]	Load Current [A]	
	Input Volt. 100[V]	Input Volt. 230[V]
3.135	136.89	136.90
2.970	136.52	136.54
2.640	138.42	138.45
2.310	140.07	140.07
--	-	-
--	-	-
--	-	-
--	-	-
--	-	-
--	-	-
--	-	-
--	-	-

COSEL

Model	PDA600F-3R3
Item	Ambient Temperature Drift
Object	+3.3V120A

Testing Circuitry Figure A

1.Values

Load 100%

Ambient Temperature[℃]	Output Voltage [V]		
	Input Volt. 100V	Input Volt. 200V	Input Volt. 230V
-20	3.345	3.345	3.346
25	3.344	3.344	3.344
50	3.341	3.341	3.340

Item	Minimum Input Voltage for Regulated Output Voltage
Object	+3.3V120A

Testing Circuitry Figure A

1.Values

Ambient Temperature[℃]	Input Voltage [V]	
	Load 50%	Load 100%
-20	66	67
25	66	67
50	66	67

Item	Overvoltage Protection
Object	+3.3V120A

Testing Circuitry Figure A

1.Values

Load 0%

Ambient Temperature[℃]	Operating Point [V]	
	Input Volt. 100V	Input Volt. 230V
-20	5.36	5.36
25	5.35	5.35
50	5.35	5.35

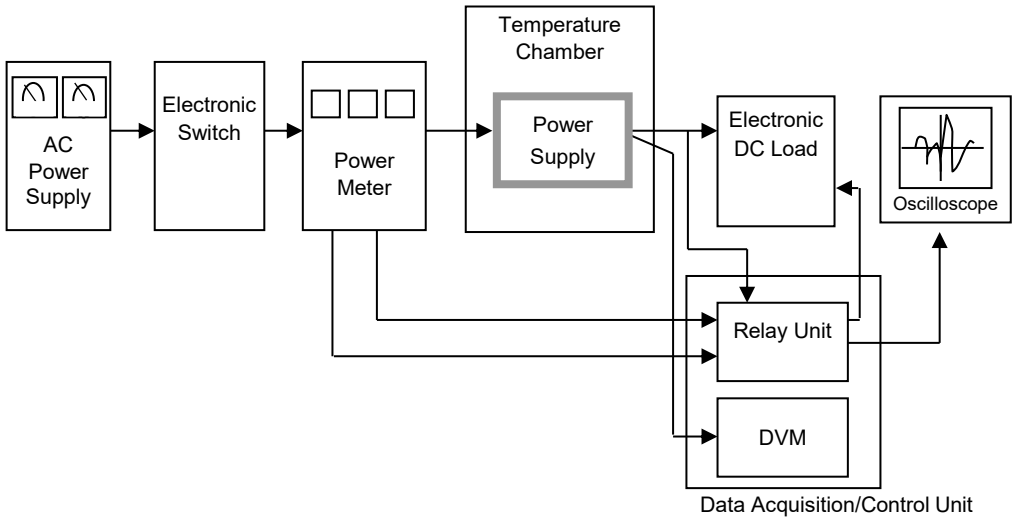

Figure A

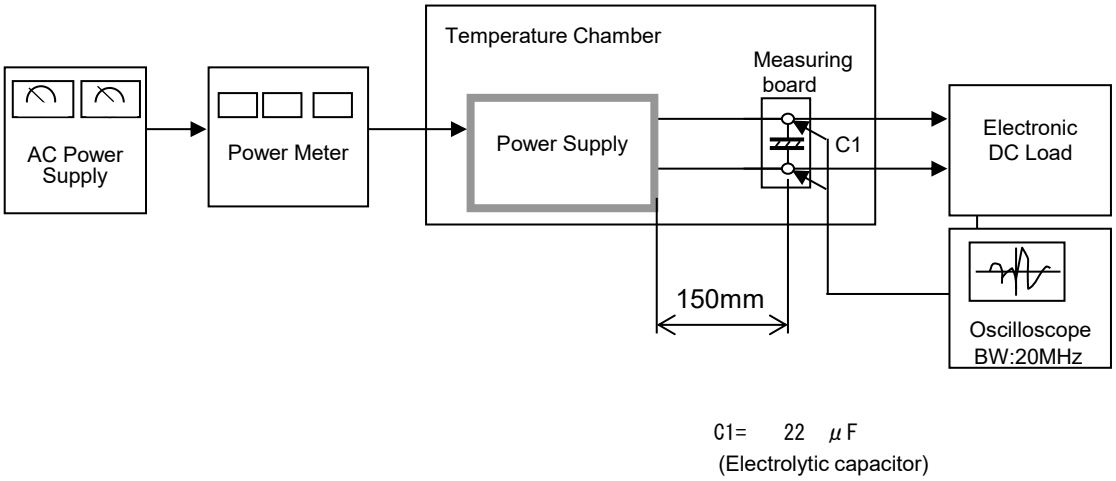

Figure B

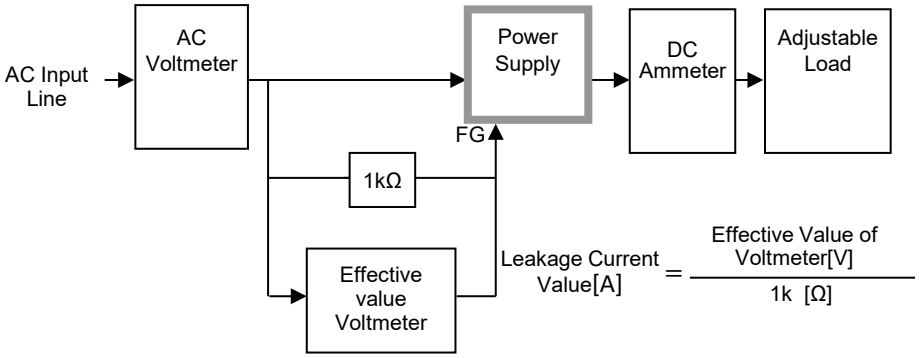

Figure C-1 (DEN-AN)

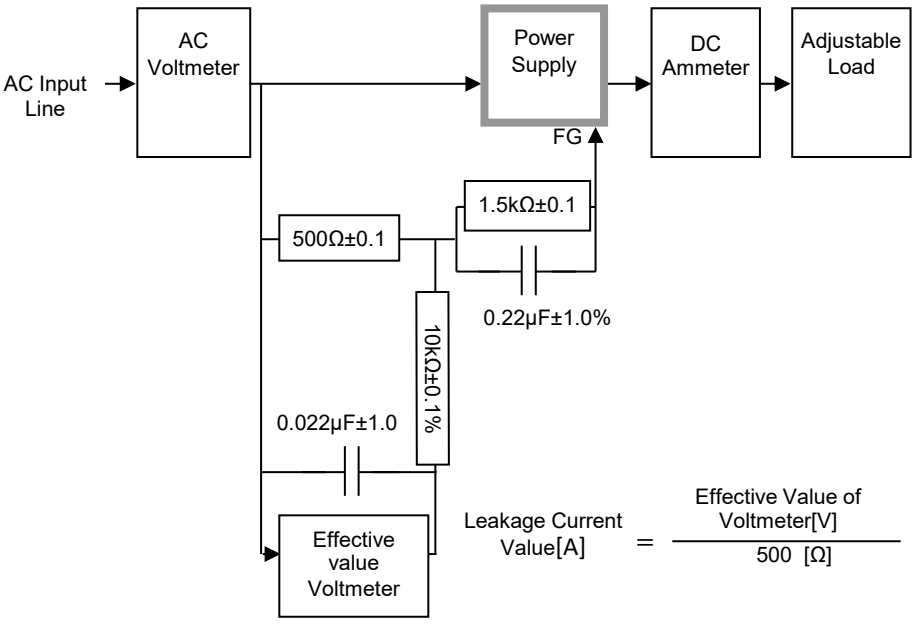

Figure C-2 (IEC62368-1 refer to IEC60990 Fig.4)

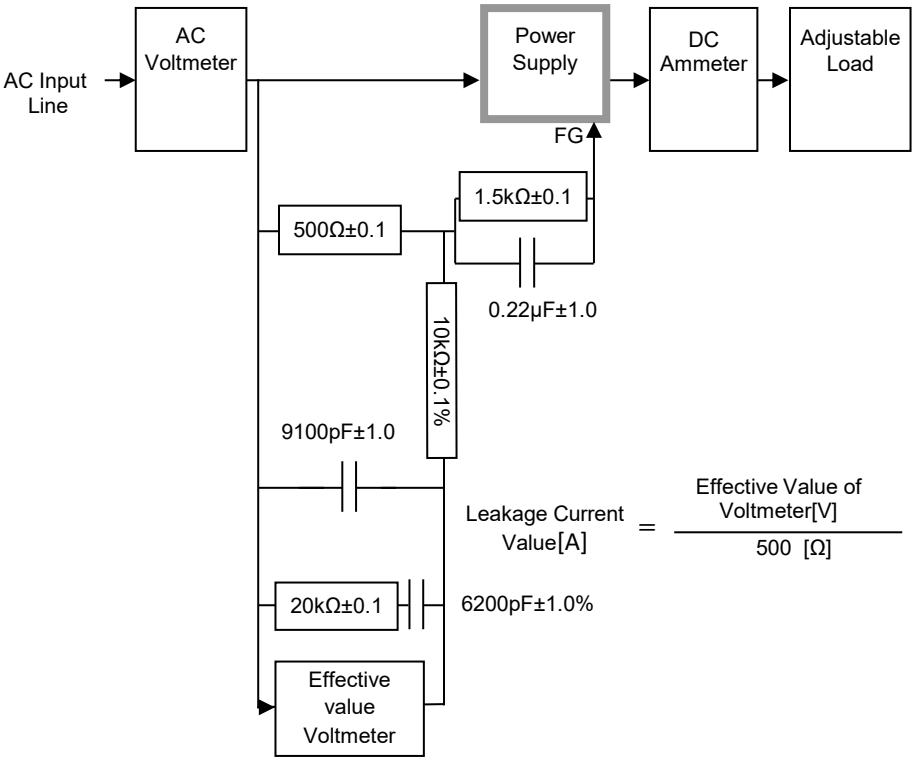

Figure C-3 (IEC62368-1 refer to IEC60990 Fig.5)