COSEL

参考資料

TEST DATA OF STMGFS802405

Regulated DC Power Supply
May 18, 2021

Approved by : Hironobu Shimizu — Hironobu Shimizu, Design Manager

Prepared by : Hikaru Inagaki — Hikaru Inagaki, Design Engineer

COSEL CO.,LTD.

参考資料

COSEL

CONTENTS

1.Input Current (by Load Current) ・・・・・・・・・・・・・・・・・・・・・・・・ 1
2.Efficiency (by Load Current) ・・・・・・・・・・・・・・・・・・・・・・・・・ 2
3.Line Regulation ・・・・・・・・・・・・・・・・・・・・・・・・・・・・・・・・ 3
4.Load Regulation ・・・・・・・・・・・・・・・・・・・・・・・・・・・・・・・・ 4
5.Ripple-Noise ・・・・・・・・・・・・・・・・・・・・・・・・・・・・・・・・・ 4
6.Rise and Fall Time ・・・・・・・・・・・・・・・・・・・・・・・・・・・・・・ 5
7.Overcurrent Protection ・・・・・・・・・・・・・・・・・・・・・・・・・・・・ 6
8.Ambient Temperature Drift ・・・・・・・・・・・・・・・・・・・・・・・・・・ 7
9.Minimum Input Voltage for Regulated Output Voltage ・・・・・・・・・・・・ 7
10.Overvoltage Protection ・・・・・・・・・・・・・・・・・・・・・・・・・・・・ 7
11.Figure of Testing Circuitry ・・・・・・・・・・・・・・・・・・・・・・・・・・ 8
(Final Page 8)

COSEL

Model	STMGFS802405
Item	Input Current (by Load Current)
Object	――――――

Temperature 25°C
Testing Circuitry Figure A

1.Graph

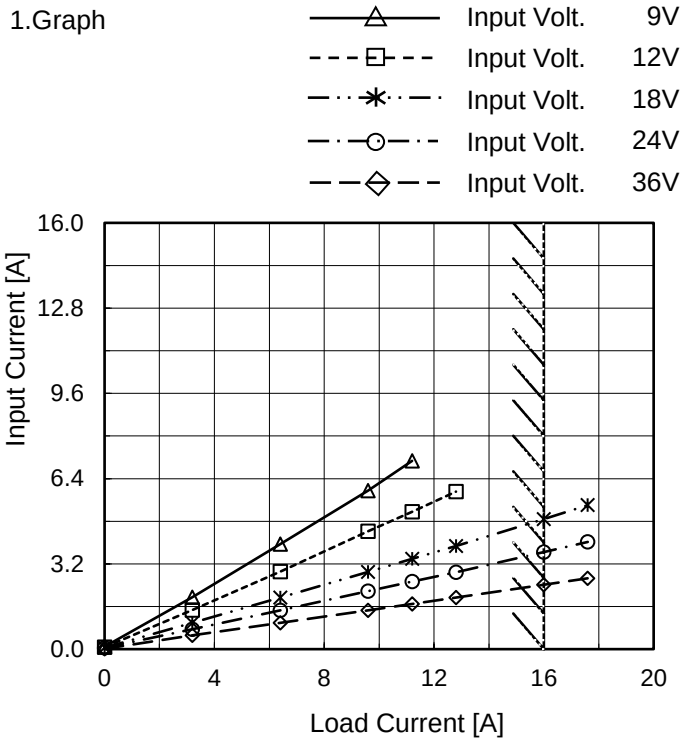

Note: Slanted line shows the range of the rated load current.

2.Values

Load Current [A]	Input Current [A]				
	Input Volt. 9[V]	Input Volt. 12[V]	Input Volt. 18[V]	Input Volt. 24[V]	Input Volt. 36[V]
0.0	0.093	0.074	0.056	0.049	0.013
3.2	1.953	1.472	0.990	0.747	0.513
6.4	3.938	2.912	1.936	1.458	0.985
9.6	5.950	4.429	2.900	2.174	1.458
11.2	7.066	5.162	3.389	2.536	1.697
12.8	- ※1	5.913	3.868	2.891	1.932
16.0	- ※1	- ※2	4.886	3.638	2.413
17.6	- ※1	- ※2	5.404	4.024	2.660
--	-	-	-	-	-
--	-	-	-	-	-
--	-	-	-	-	-

※1 Maximam output current at minimum input Voltage is 70% of rated load current.
※2 Maximam output current at 12V input Voltage is 80% of rated load current.
Refer to instruction manuals for details of input derating.

BC-11721

COSEL

Model	STMGFS802405
Item	Efficiency (by Load Current)
Object	――――――――

Temperature 25°C
Testing Circuitry Figure A

1.Graph

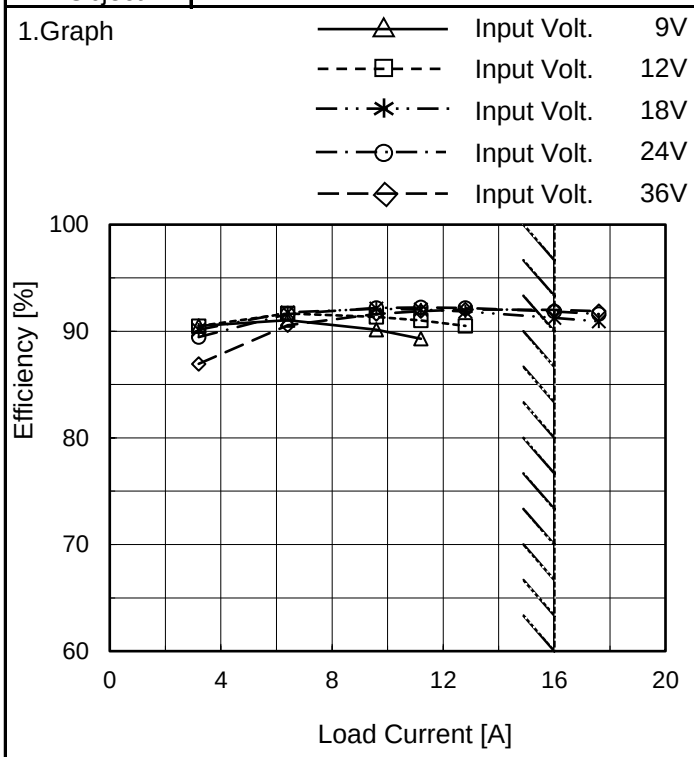

Note: Slanted line shows the range of the rated load current.

2.Values

Load Current [A]	Efficiency [%] Input Volt. 9[V]	Input Volt. 12[V]	Input Volt. 18[V]	Input Volt. 24[V]	Input Volt. 36[V]
0.0	-	-	-	-	-
3.2	90.5	90.5	90.1	89.5	86.9
6.4	91.0	91.7	91.8	91.6	90.5
9.6	90.1	91.4	92.1	92.2	91.6
11.2	89.3	91.0	92.0	92.2	91.9
12.8	- ※1	90.5	91.8	92.2	92.0
16.0	- ※1	- ※2	91.3	91.9	92.0
17.6	- ※1	- ※2	90.9	91.6	91.9
--	-	-	-	-	-
--	-	-	-	-	-
--	-	-	-	-	-

※1 Maximam output current at minimum input Voltage is 70% of rated load current.
※2 Maximam output current at 12V input Voltage is 80% of rated load current.
Refer to instruction manuals for details of input derating.

BC-11721

COSEL

Model	STMGFS802405
Item	Line Regulation
Object	+5V16A

Temperature 25°C
Testing Circuitry Figure A

1.Graph

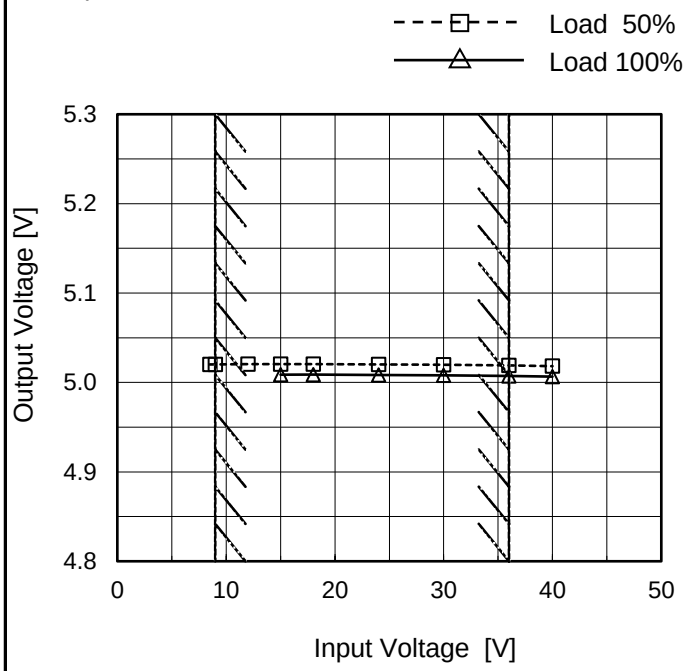

Note: Slanted line shows the range of the rated input voltage.

2.Values

Input Voltage [V]	Output Voltage [V]	
	Load 50%	Load 100%
8.5	5.020	- ※1
9.0	5.020	- ※1
12.0	5.020	- ※2
15.0	5.020	5.009
18.0	5.021	5.009
24.0	5.020	5.009
30.0	5.020	5.008
36.0	5.019	5.007
40.0	5.018	5.007

※1 Maximam output current at minimum input Voltage is 70% of rated load current.
※2 Maximam output current at 12V input Voltage is 80% of rated load current.
Refer to instruction manuals for details of input derating.

BC-11721

COSEL

Model	STMGFS802405
Item	Load Regulation
Object	+5V16A

Temperature 25°C
Testing Circuitry Figure A

1.Graph

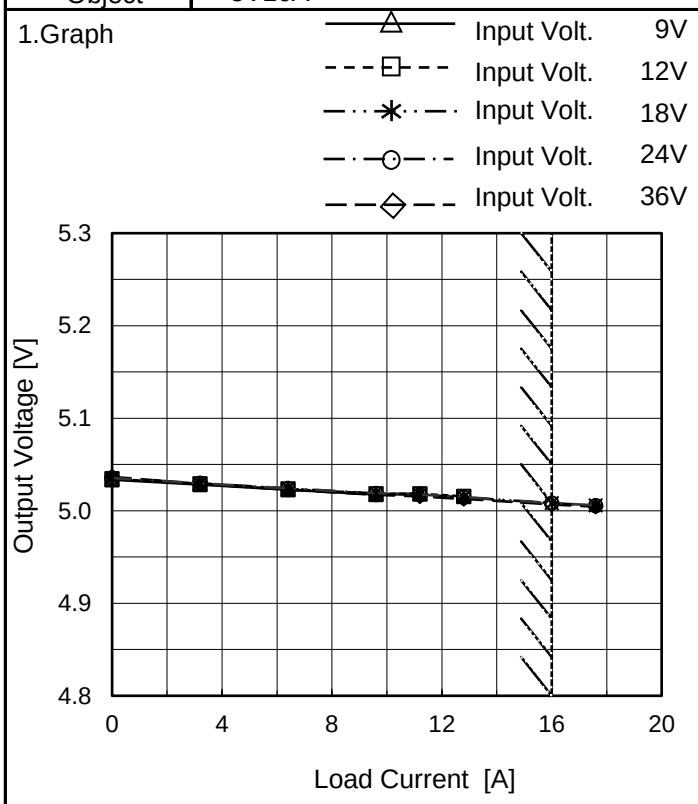

Note: Slanted line shows the range of the rated load current.

2.Values

Load Current [A]	Output Voltage [V]				
	Input Volt. 9[V]	Input Volt. 12[V]	Input Volt. 18[V]	Input Volt. 24[V]	Input Volt. 36[V]
0.0	5.034	5.034	5.035	5.035	5.037
3.2	5.028	5.029	5.030	5.030	5.029
6.4	5.023	5.024	5.024	5.024	5.023
9.6	5.018	5.018	5.019	5.019	5.017
11.2	5.019	5.018	5.018	5.017	5.016
12.8	- ※1	5.016	5.015	5.015	5.013
16.0	- ※1	- ※2	5.008	5.008	5.007
17.6	- ※1	- ※2	5.006	5.006	5.004
--	-	-	-	-	-
--	-	-	-	-	-
--	-	-	-	-	-

※1 Maximam output current at minimum input Voltage is 70% of rated load current.
※2 Maximam output current at 9V input Voltage is 80% of rated load current.
Refer to instruction manuals for details of input derating.

Item	Ripple-Noise
Object	+5V16A

Temperature 25°C
Testing Circuitry Figure B

1.Graph

Input Voltage 24V
Load 100%

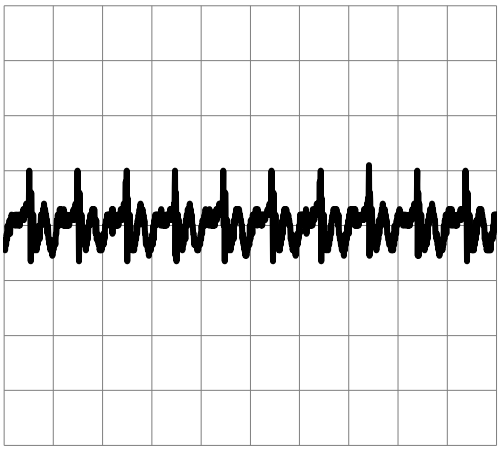

20[mV/div]

5[μs/div]

BC-11721

COSEL

Model	STMGFS802405
Item	Rise and Fall Time
Object	+5V16A

Temperature 25°C
Testing Circuitry Figure A

1.Graph

Input Volt. 24 V

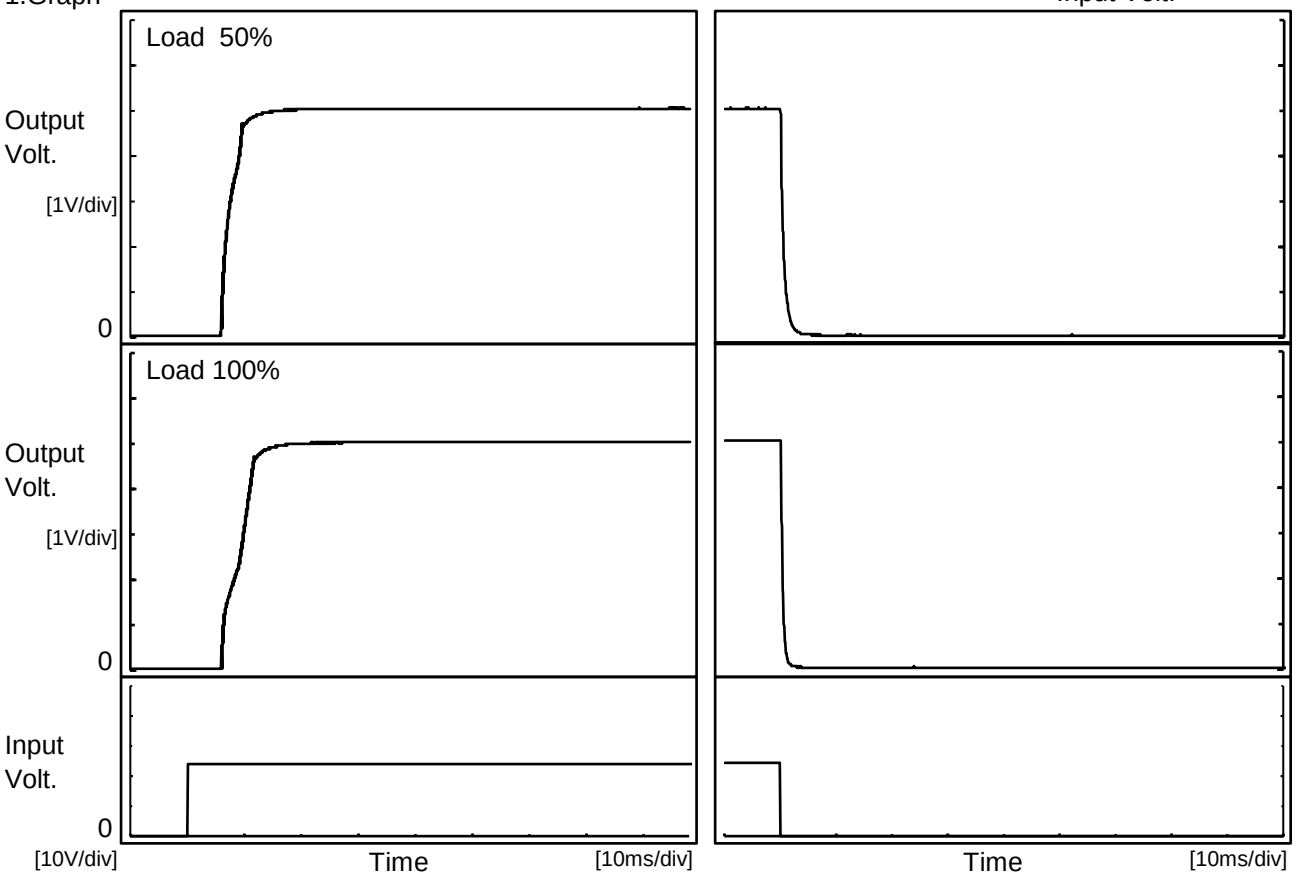

2.Values

[ms]

Load \ Time	Td	Tr	Ts	Th	Tf
50 %	6.3	3.5	9.8	0.2	1.5
100 %	6.2	5.5	11.7	0.2	0.7

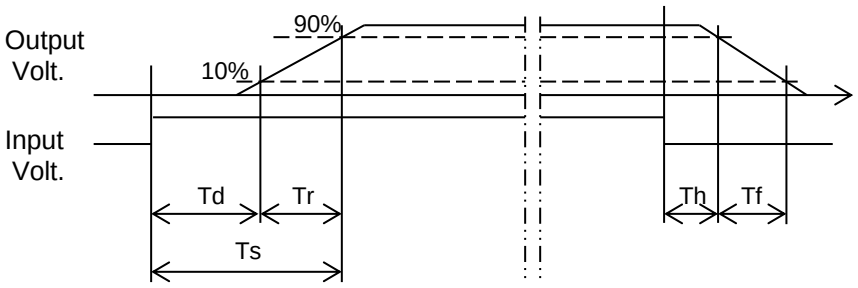

BC-11721

COSEL

Model	STMGFS802405
Item	Overcurrent Protection
Object	+5V16A

Temperature 25°C
Testing Circuitry Figure A

1.Graph

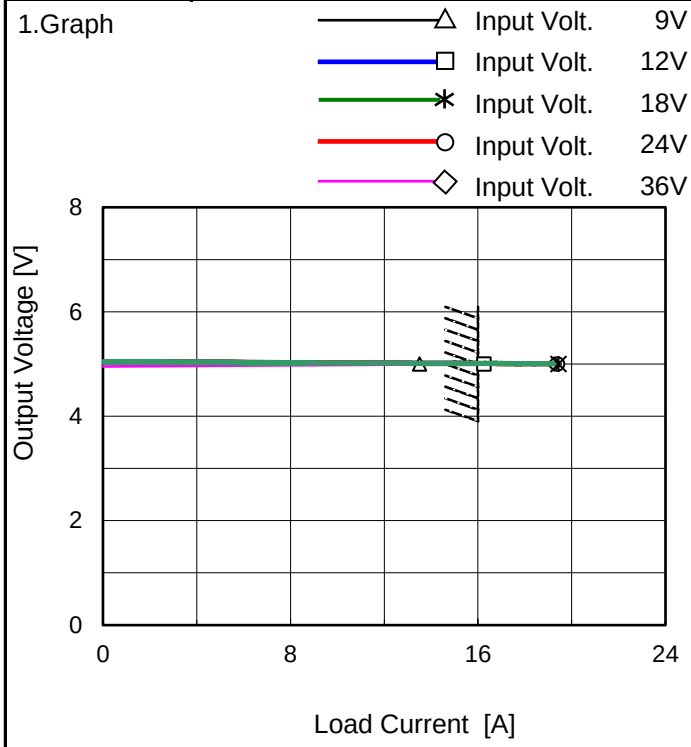

Note: Slanted line shows the range of the rated load current.

Intermittent operation occurs when overcurrent protection is activated.

2.Values

Output Voltage [V]	Load Current [A]				
	Input Volt. 9[V]	Input Volt. 12[V]	Input Volt. 18[V]	Input Volt. 24[V]	Input Volt. 36[V]
5.00	13.512	16.251	19.430	19.398	19.255
4.75	- ※1	- ※2	-	-	-
4.50	-	-	-	-	-
4.00	-	-	-	-	-
3.50	-	-	-	-	-
3.00	-	-	-	-	-
2.50	-	-	-	-	-
2.00	-	-	-	-	-
1.50	-	-	-	-	-
1.00	-	-	-	-	-
0.50	-	-	-	-	-
0.00	-	-	-	-	-

※1 Maximam output current at minimum input Voltage is 70% of rated load current.
※2 Maximam output current at 12V input Voltage is 80% of rated load current.
Refer to instruction manuals for details of input derating.

BC-11721

COSEL

Model	STMGFS802405
Item	Ambient Temperature Drift
Object	+5V16A

Testing Circuitry Figure A

1.Values

Load 100%

Ambient Temperature[℃]	Output Voltage [V]				
	Input Volt. 9V	Input Volt. 12V	Input Volt. 18V	Input Volt. 24V	Input Volt. 36V
-20	5.004	5.004	4.998	4.998	4.997
25	5.016	5.013	5.007	5.007	5.006
40	5.017	5.015	5.008	5.008	5.006

Note: In case of input Volt.9V, Load 70%. 12V, Load 80%.
Other case Load 100%.

Item	Minimum Input Voltage for Regulated Output Voltage
Object	+5V16A

Testing Circuitry Figure A

1.Values

Ambient Temperature[℃]	Input Voltage [V]	
	Load 50%	Load 70%
-20	7.6	7.7
25	7.6	7.7
40	7.7	7.7

Item	Overvoltage Protection
Object	+5V16A

Testing Circuitry Figure A

1.Values

Load 0%

Ambient Temperature[℃]	Operating Point [V]				
	Input Volt. 9V	Input Volt. 12V	Input Volt. 18V	Input Volt. 24V	Input Volt. 36V
-20	6.22	6.22	6.22	6.22	6.22
25	6.29	6.29	6.29	6.29	6.29
40	6.29	6.29	6.29	6.29	6.29

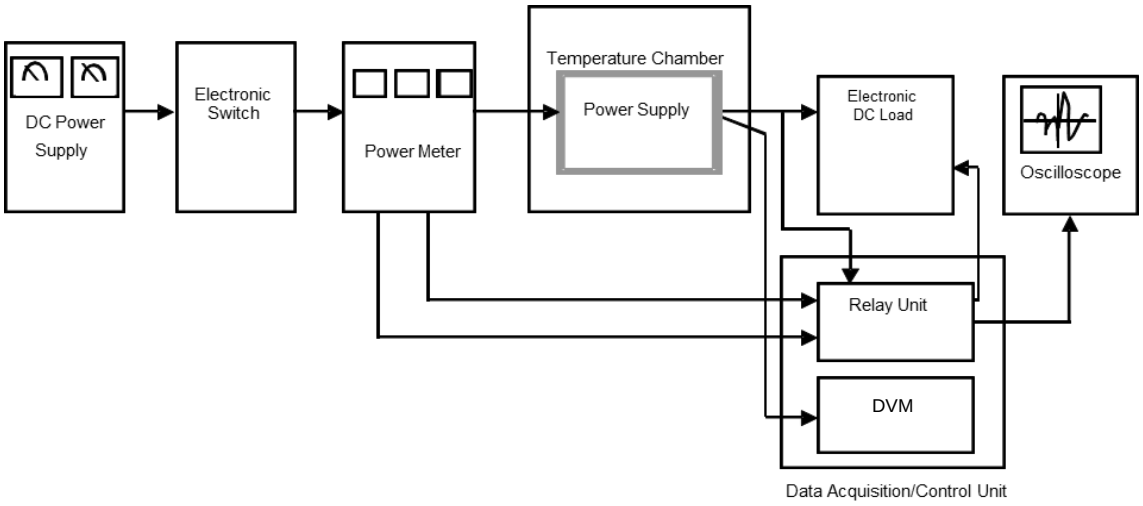

Figure A

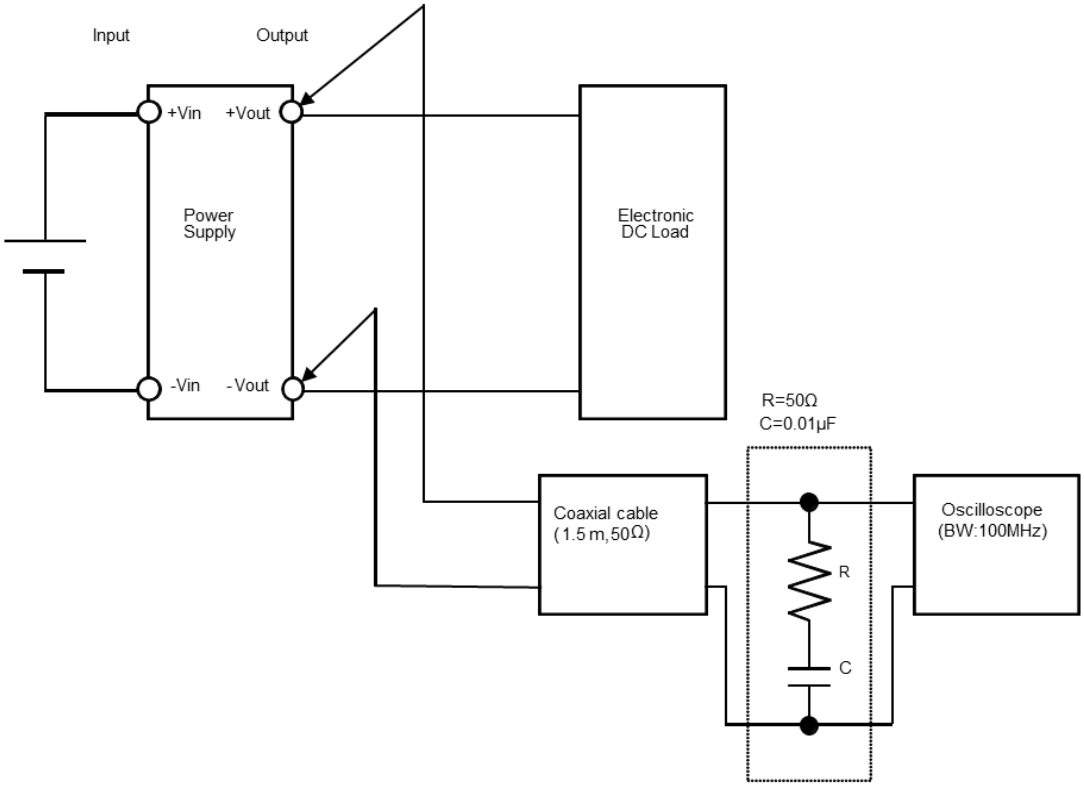

Figure B (Ripple noise Characteristic)