COSEL

参考資料

TEST DATA OF STMGFS802415

Regulated DC Power Supply
May 18, 2021

Approved by : Hironobu Shimizu — Design Manager

Prepared by : Hikaru Inagaki — Design Engineer

参考資料

COSEL

CONTENTS

1.Input Current (by Load Current) ・・・・・・・・・・・・・・・・・・・・・・・・ 1
2.Efficiency (by Load Current) ・・・・・・・・・・・・・・・・・・・・・・・・ 2
3.Line Regulation ・・・・・・・・・・・・・・・・・・・・・・・・・・・・・・・・ 3
4.Load Regulation ・・・・・・・・・・・・・・・・・・・・・・・・・・・・・・・・ 4
5.Ripple-Noise ・・・・・・・・・・・・・・・・・・・・・・・・・・・・・・・・・・ 4
6.Rise and Fall Time ・・・・・・・・・・・・・・・・・・・・・・・・・・・・・・ 5
7.Overcurrent Protection ・・・・・・・・・・・・・・・・・・・・・・・・・・・・ 6
8.Ambient Temperature Drift ・・・・・・・・・・・・・・・・・・・・・・・・・・ 7
9.Minimum Input Voltage for Regulated Output Voltage ・・・・・・・・・・・・ 7
10.Overvoltage Protection ・・・・・・・・・・・・・・・・・・・・・・・・・・・・ 7
11.Figure of Testing Circuitry ・・・・・・・・・・・・・・・・・・・・・・・・・・ 8
(Final Page 8)

COSEL

Model	STMGFS802415
Item	Input Current (by Load Current)
Object	――――――――

Temperature 25°C
Testing Circuitry Figure A

1.Graph

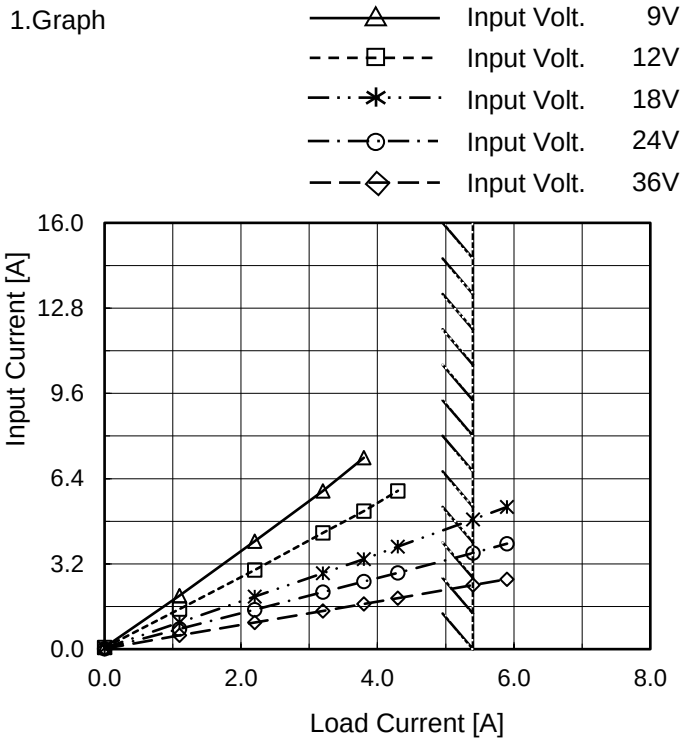

Note: Slanted line shows the range of the rated load current.

2.Values

Load Current [A]	Input Current [A]				
	Input Volt. 9[V]	Input Volt. 12[V]	Input Volt. 18[V]	Input Volt. 24[V]	Input Volt. 36[V]
0.0	0.069	0.056	0.046	0.016	0.015
1.1	2.010	1.505	1.001	0.759	0.522
2.2	4.047	2.965	1.969	1.481	1.000
3.2	5.936	4.359	2.851	2.136	1.436
3.8	7.183	5.184	3.383	2.540	1.699
4.3	- ※1	5.944	3.848	2.868	1.915
5.4	- ※1	- ※2	4.866	3.610	2.407
5.9	- ※1	- ※2	5.339	3.959	2.625
--	-	-	-	-	-
--	-	-	-	-	-
--	-	-	-	-	-

※1 Maximam output current at minimum input Voltage is 70% of rated load current.
※2 Maximam output current at 12V input Voltage is 80% of rated load current.
Refer to instruction manuals for details of input derating.

BC-11723

COSEL

Model	STMGFS802415
Item	Efficiency (by Load Current)
Object	――――――――

Temperature 25°C
Testing Circuitry Figure A

1.Graph

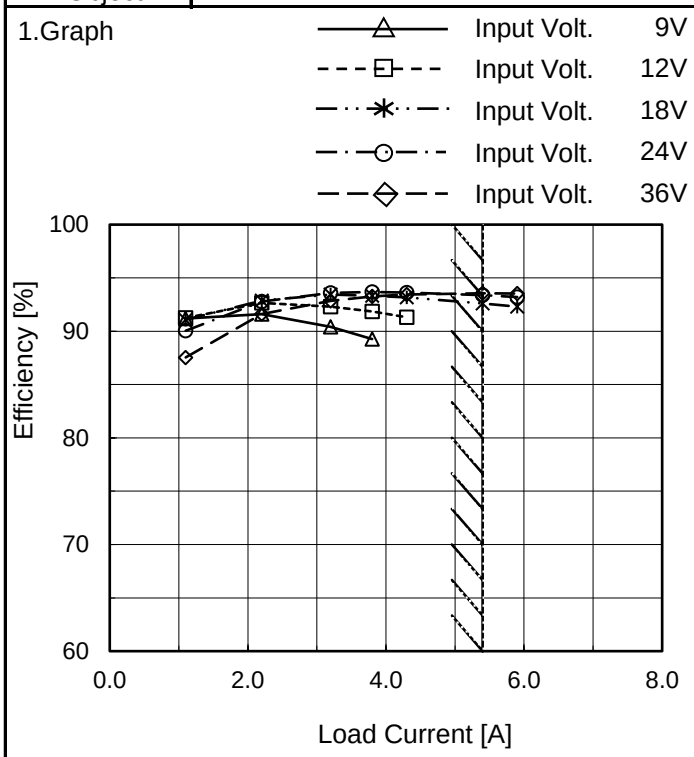

Note: Slanted line shows the range of the rated load current.

2.Values

Load Current [A]	Efficiency [%] Input Volt. 9[V]	Input Volt. 12[V]	Input Volt. 18[V]	Input Volt. 24[V]	Input Volt. 36[V]
0.0	-	-	-	-	-
1.1	91.2	91.2	91.1	90.0	87.5
2.2	91.6	92.7	92.9	92.8	91.6
3.2	90.4	92.3	93.4	93.6	92.9
3.8	89.3	91.8	93.3	93.7	93.3
4.3	- ※1	91.3	93.2	93.6	93.5
5.4	- ※1	- ※2	92.6	93.4	93.6
5.9	- ※1	- ※2	92.3	93.2	93.5
--	-	-	-	-	-
--	-	-	-	-	-
--	-	-	-	-	-

※1 Maximam output current at minimum input Voltage is 70% of rated load current.
※2 Maximam output current at 12V input Voltage is 80% of rated load current.
Refer to instruction manuals for details of input derating.

BC-11723

COSEL

Model	STMGFS802415
Item	Line Regulation
Object	+15V5.4A

Temperature 25°C
Testing Circuitry Figure A

1.Graph

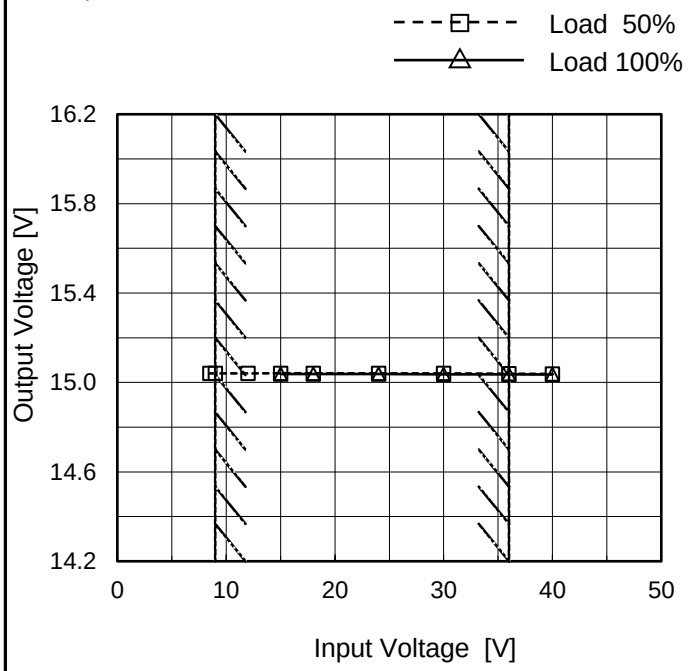

Note: Slanted line shows the range of the rated input voltage.

2.Values

Input Voltage [V]	Output Voltage [V]	
	Load 50%	Load 100%
8.5	15.040	- ※1
9.0	15.040	- ※1
12.0	15.041	- ※2
15.0	15.041	15.038
18.0	15.041	15.038
24.0	15.040	15.038
30.0	15.040	15.037
36.0	15.039	15.036
40.0	15.038	15.036

※1 Maximam output current at minimum input Voltage is 70% of rated load current.
※2 Maximam output current at 12V input Voltage is 80% of rated load current.
Refer to instruction manuals for details of input derating.

BC-11723

COSEL

Model	STMGFS802415
Item	Load Regulation
Object	+15V5.4A

Temperature 25°C
Testing Circuitry Figure A

1.Graph

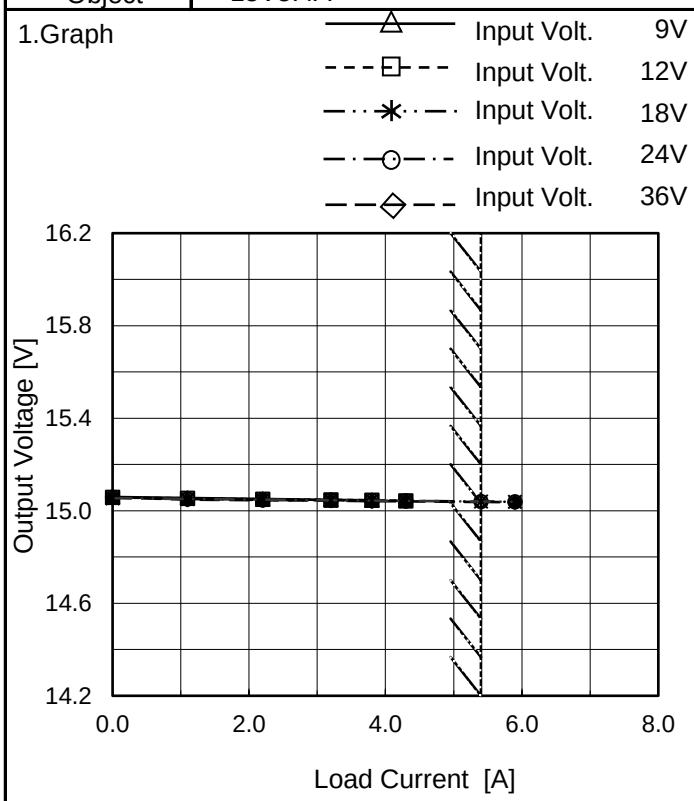

Note: Slanted line shows the range of the rated load current.

2.Values

Load Current [A]	Output Voltage [V]				
	Input Volt. 9[V]	Input Volt. 12[V]	Input Volt. 18[V]	Input Volt. 24[V]	Input Volt. 36[V]
0.0	15.060	15.057	15.054	15.058	15.058
1.1	15.055	15.054	15.050	15.051	15.048
2.2	15.051	15.050	15.048	15.047	15.045
3.2	15.047	15.047	15.046	15.046	15.044
3.8	15.045	15.045	15.044	15.044	15.042
4.3	- ※1	15.043	15.043	15.043	15.041
5.4	- ※1	- ※2	15.040	15.040	15.038
5.9	- ※1	- ※2	15.039	15.039	15.037
--	-	-	-	-	-
--	-	-	-	-	-
--	-	-	-	-	-

※1 Maximam output current at minimum input Voltage is 70% of rated load current.
※2 Maximam output current at 9V input Voltage is 80% of rated load current.
Refer to instruction manuals for details of input derating.

Item	Ripple-Noise
Object	+15V5.4A

Temperature 25°C
Testing Circuitry Figure B

1.Graph

Input Voltage 24V
Load 100%

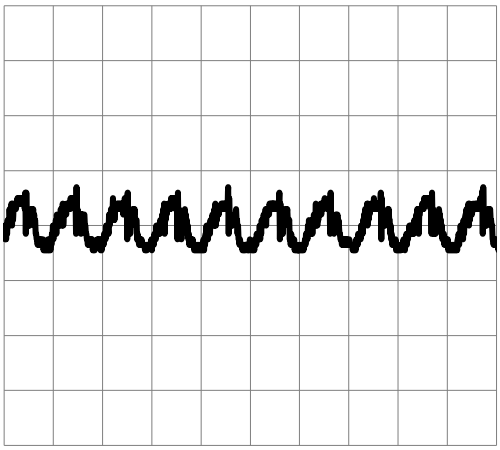

20[mV/div]

5[μs/div]

BC-11723

COSEL

Model	STMGFS802415	
Item	Rise and Fall Time	Temperature 25°C Testing Circuitry Figure A
Object	+15V5.4A	

1.Graph

Input Volt. 24 V

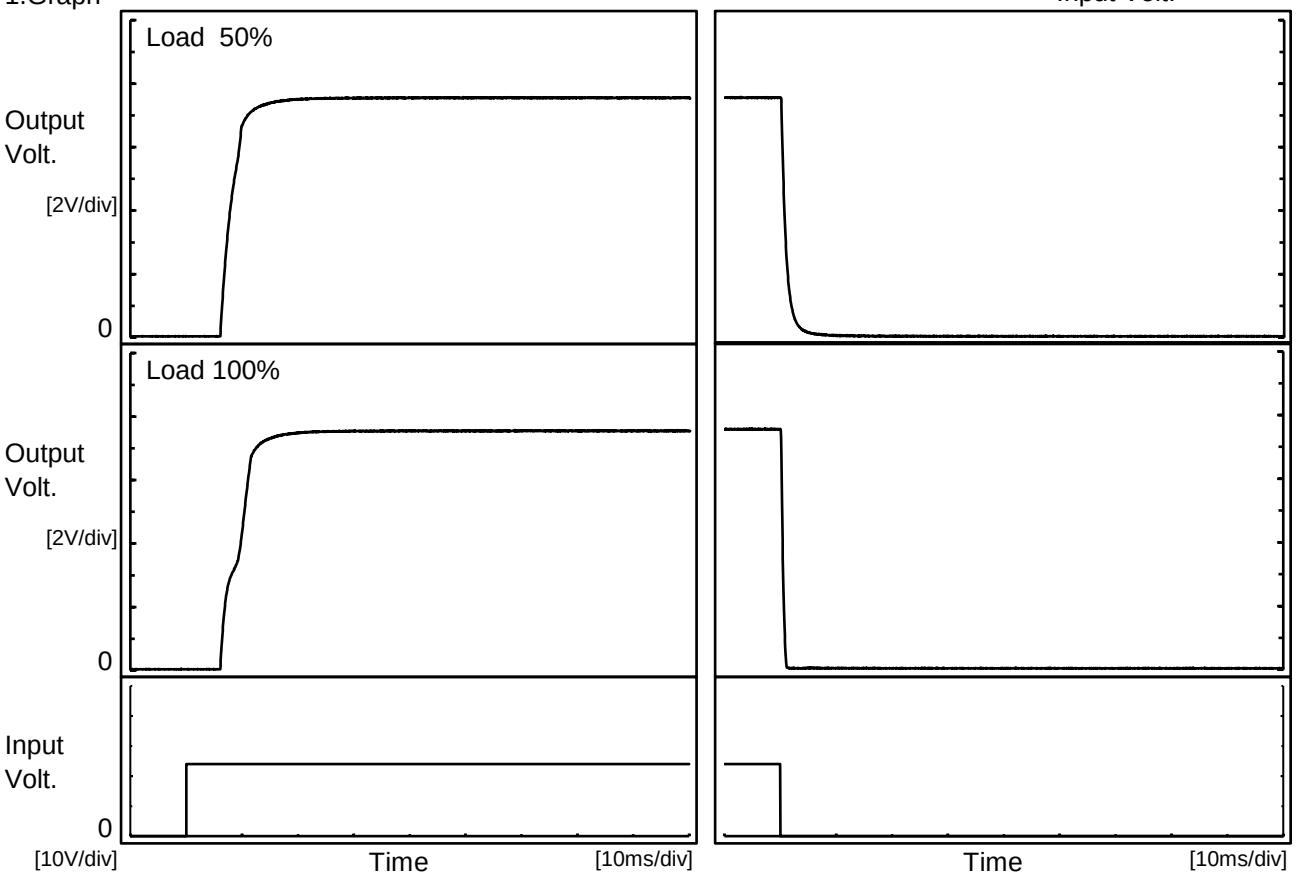

2.Values

[ms]

Load \ Time	Td	Tr	Ts	Th	Tf
50 %	6.4	3.9	10.3	0.3	2.0
100 %	6.4	5.4	11.8	0.2	0.7

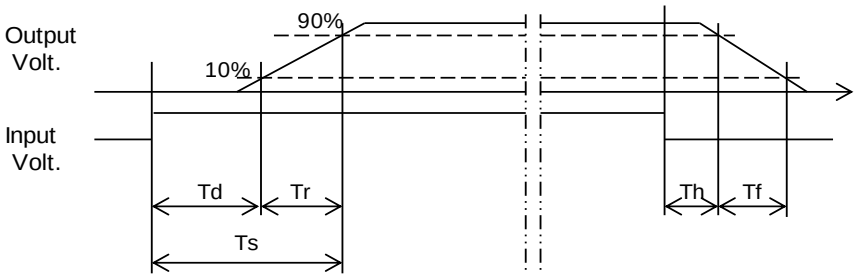

COSEL

Model	STMGFS802415
Item	Overcurrent Protection
Object	+15V5.4A

Temperature 25°C
Testing Circuitry Figure A

1.Graph

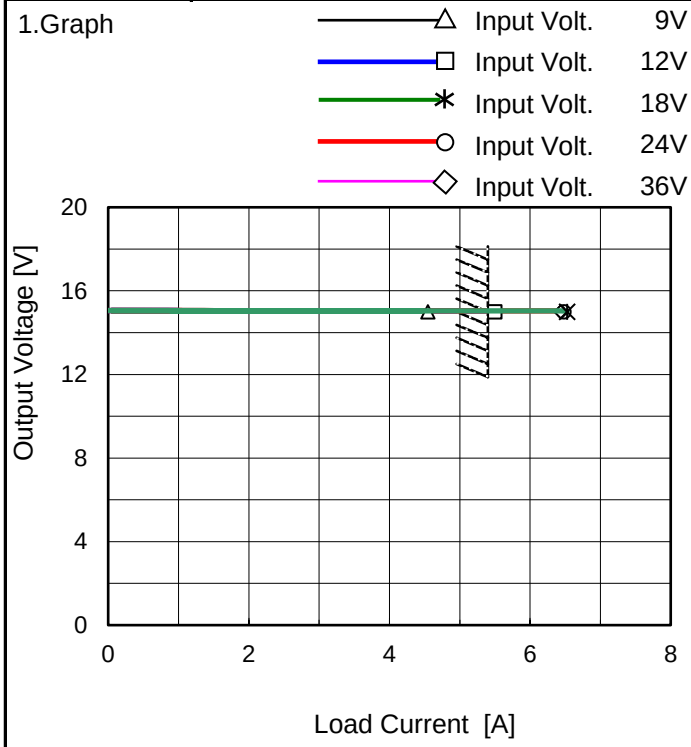

Note: Slanted line shows the range of the rated load current.

Intermittent operation occurs when overcurrent protection is activated.

2.Values

Output Voltage [V]	Load Current [A]				
	Input Volt. 9[V]	Input Volt. 12[V]	Input Volt. 18[V]	Input Volt. 24[V]	Input Volt. 36[V]
15.0	4.548	5.498	6.526	6.481	6.439
14.3	- ※1	- ※2	-	-	-
13.5	-	-	-	-	-
12.0	-	-	-	-	-
10.5	-	-	-	-	-
9.0	-	-	-	-	-
7.5	-	-	-	-	-
6.0	-	-	-	-	-
4.5	-	-	-	-	-
3.0	-	-	-	-	-
1.5	-	-	-	-	-
0.0	-	-	-	-	-

※1 Maximam output current at minimum input Voltage is 70% of rated load current.
※2 Maximam output current at 12V input Voltage is 80% of rated load current.
Refer to instruction manuals for details of input derating.

BC-11723

COSEL

Model	STMGFS802415
Item	Ambient Temperature Drift
Object	+15V5.4A

Testing Circuitry Figure A

1.Values

Load 100%

Ambient Temperature[℃]	Output Voltage [V]				
	Input Volt. 9V	Input Volt. 12V	Input Volt. 18V	Input Volt. 24V	Input Volt. 36V
-20	15.001	15.003	15.001	15.001	15.000
25	15.037	15.037	15.036	15.036	15.035
40	15.044	15.043	15.041	15.041	15.039

Note: In case of input Volt.9V, Load 70%. 12V, Load 80%.
Other case Load 100%.

Item	Minimum Input Voltage for Regulated Output Voltage
Object	+15V5.4A

Testing Circuitry Figure A

1.Values

Ambient Temperature[℃]	Input Voltage [V]	
	Load 50%	Load 70%
-20	7.6	7.7
25	7.6	7.7
40	7.6	7.7

Item	Overvoltage Protection
Object	+15V5.4A

Testing Circuitry Figure A

1.Values

Load 0%

Ambient Temperature[℃]	Operating Point [V]				
	Input Volt. 9V	Input Volt. 12V	Input Volt. 18V	Input Volt. 24V	Input Volt. 36V
-20	18.86	18.86	18.86	18.86	18.86
25	18.93	18.93	18.93	18.93	18.93
40	19.00	19.00	19.00	19.00	19.00

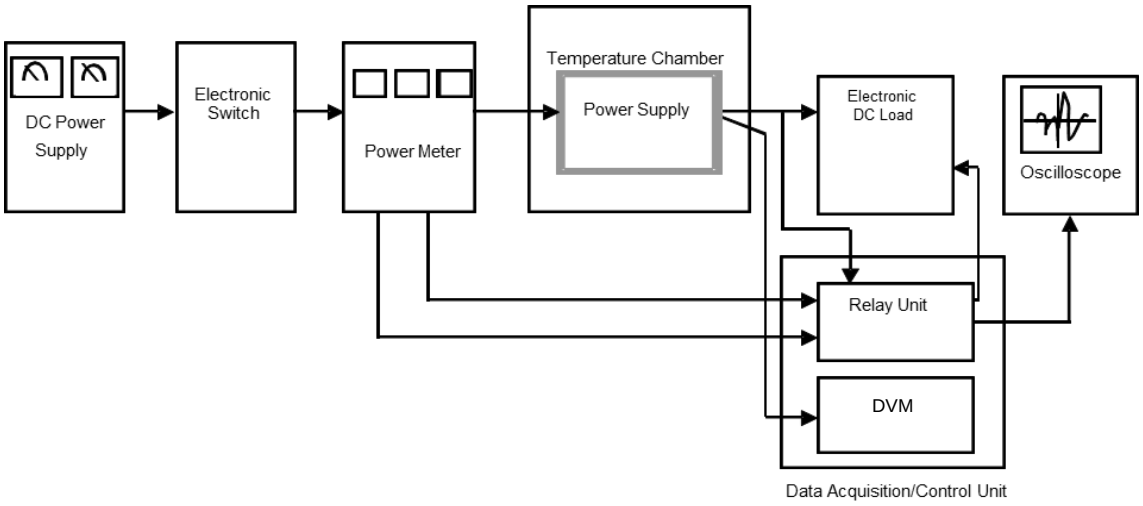

Figure A

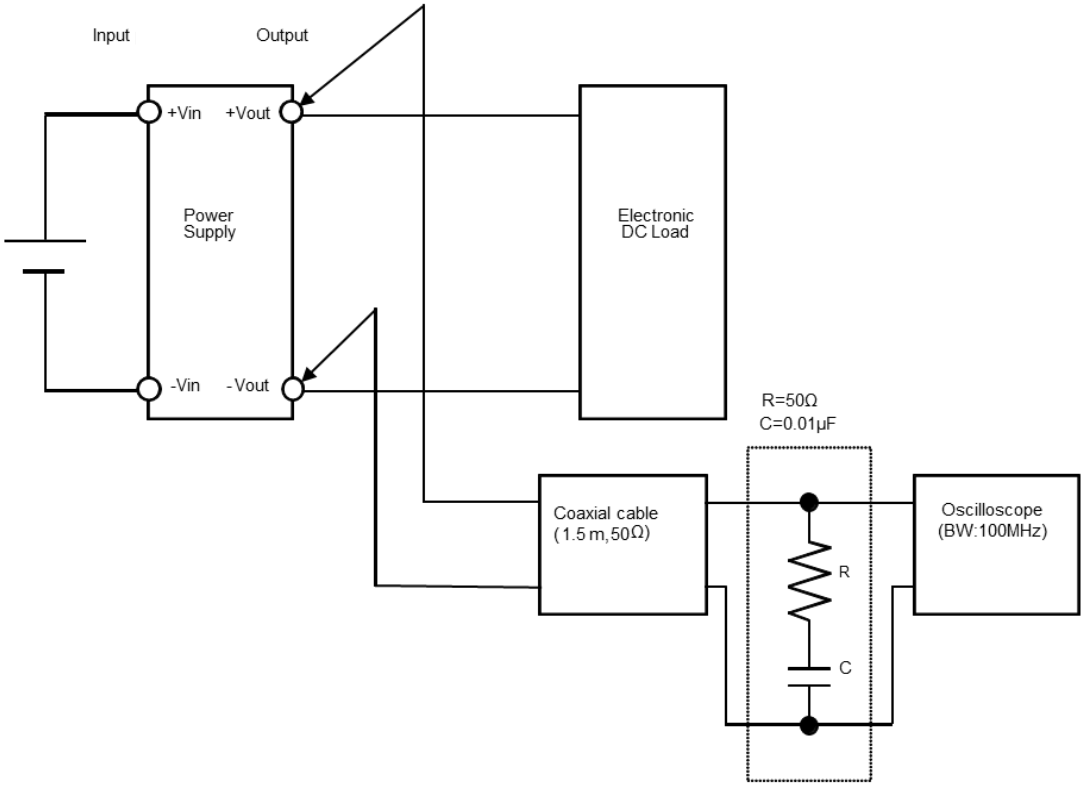

Figure B (Ripple noise Characteristic)