COSEL

参考資料

TEST DATA OF STMGFS80483R3

Regulated DC Power Supply
May 18, 2021

Approved by : Hironobu Shimizu — Hironobu Shimizu, Design Manager

Prepared by : Hikaru Inagaki — Hikaru Inagaki, Design Engineer

COSEL CO.,LTD.

参考資料

COSEL

CONTENTS

1.Input Current (by Load Current) ・・・・・・・・・・・・・・・・・・・・・・・・ 1
2.Efficiency (by Load Current) ・・・・・・・・・・・・・・・・・・・・・・・・ 2
3.Line Regulation ・・・・・・・・・・・・・・・・・・・・・・・・・・・・・・・・ 3
4.Load Regulation ・・・・・・・・・・・・・・・・・・・・・・・・・・・・・・・・ 4
5.Ripple-Noise ・・・・・・・・・・・・・・・・・・・・・・・・・・・・・・・・・・ 4
6.Rise and Fall Time ・・・・・・・・・・・・・・・・・・・・・・・・・・・・・・ 5
7.Overcurrent Protection ・・・・・・・・・・・・・・・・・・・・・・・・・・・・ 6
8.Ambient Temperature Drift ・・・・・・・・・・・・・・・・・・・・・・・・・・ 7
9.Minimum Input Voltage for Regulated Output Voltage ・・・・・・・・・・・・ 7
10.Overvoltage Protection ・・・・・・・・・・・・・・・・・・・・・・・・・・・・ 7
11.Figure of Testing Circuitry ・・・・・・・・・・・・・・・・・・・・・・・・・・ 8
(Final Page 8)

COSEL

Model	STMGFS80483R3
Item	Input Current (by Load Current)
Object	――――――――

Temperature 25°C
Testing Circuitry Figure A

1.Graph

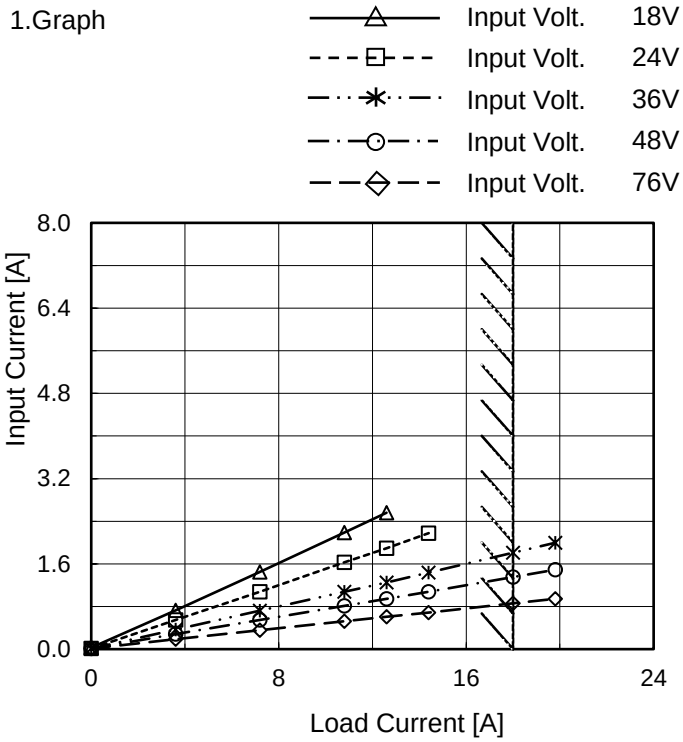

Note: Slanted line shows the range of the rated load current.

2.Values

Load Current [A]	Input Current [A]				
	Input Volt. 18[V]	Input Volt. 24[V]	Input Volt. 36[V]	Input Volt. 48[V]	Input Volt. 76[V]
0.0	0.028	0.012	0.011	0.011	0.011
3.6	0.727	0.548	0.369	0.281	0.188
7.2	1.451	1.079	0.723	0.546	0.354
10.8	2.188	1.627	1.075	0.811	0.523
12.6	2.560	1.896	1.254	0.944	0.605
14.4	- ※1	2.177	1.438	1.077	0.688
18.0	- ※1	- ※2	1.810	1.350	0.859
19.8	- ※1	- ※2	1.997	1.490	0.944
--	-	-	-	-	-
--	-	-	-	-	-
--	-	-	-	-	-

※1 Maximam output current at minimum input Voltage is 70% of rated load current.
※2 Maximam output current at 24V input Voltage is 80% of rated load current.
Refer to instruction manuals for details of input derating.

BC-11728

COSEL

Model	STMGFS80483R3
Item	Efficiency (by Load Current)
Object	――――――――

Temperature 25°C
Testing Circuitry Figure A

1.Graph

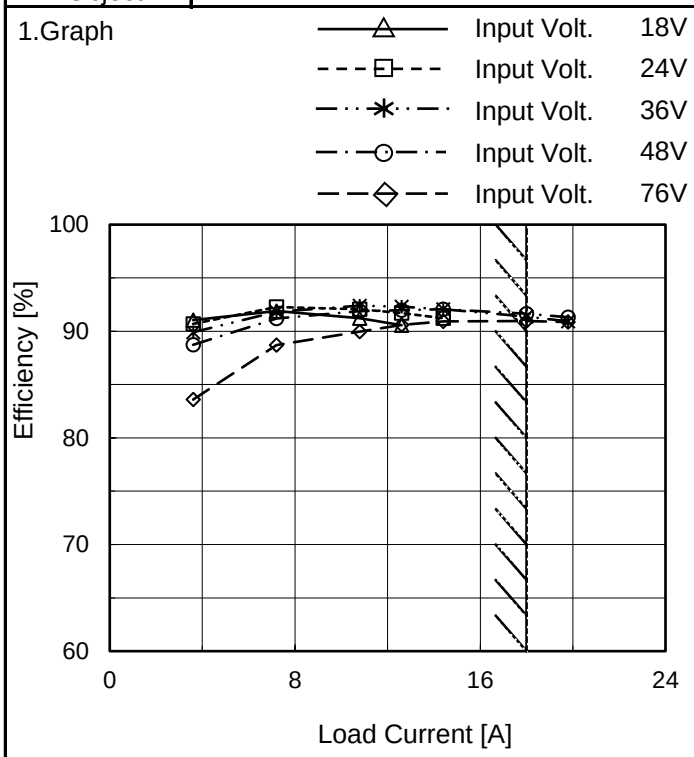

Note: Slanted line shows the range of the rated load current.

2.Values

Load Current [A]	Efficiency [%] Input Volt. 18[V]	Input Volt. 24[V]	Input Volt. 36[V]	Input Volt. 48[V]	Input Volt. 76[V]
0.0	-	-	-	-	-
3.6	91.0	90.7	89.9	88.7	83.6
7.2	91.9	92.3	91.8	91.2	88.7
10.8	91.2	92.1	92.4	91.9	90.0
12.6	90.6	91.7	92.3	92.0	90.6
14.4	- ※1	91.2	92.1	92.1	90.9
18.0	- ※1	- ※2	91.4	91.6	91.0
19.8	- ※1	- ※2	90.9	91.3	90.8
--	-	-	-	-	-
--	-	-	-	-	-
--	-	-	-	-	-

※1 Maximam output current at minimum input Voltage is 70% of rated load current.
※2 Maximam output current at 24V input Voltage is 80% of rated load current.
Refer to instruction manuals for details of input derating.

BC-11728

COSEL

Model	STMGFS80483R3
Item	Line Regulation
Object	+3.3V18A

Temperature 25°C
Testing Circuitry Figure A

1.Graph

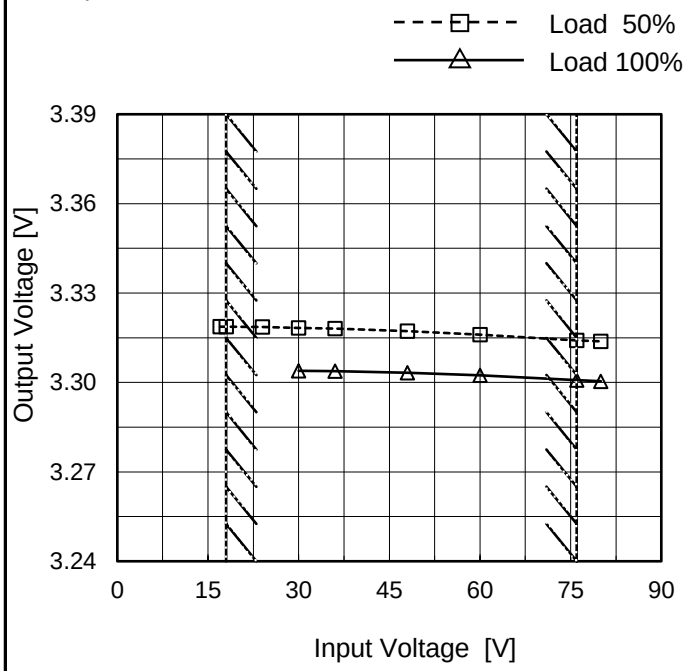

Note: Slanted line shows the range of the rated input voltage.

2.Values

Input Voltage [V]	Output Voltage [V]	
	Load 50%	Load 100%
17	3.319	- ※1
18	3.319	- ※1
24	3.319	- ※2
30	3.318	3.304
36	3.318	3.304
48	3.317	3.303
60	3.316	3.302
76	3.314	3.301
80	3.314	3.300

※1 Maximam output current at minimum input Voltage is 70% of rated load current.
※2 Maximam output current at 24V input Voltage is 80% of rated load current.
Refer to instruction manuals for details of input derating.

BC-11728

COSEL

Model	STMGFS80483R3
Item	Load Regulation
Object	+3.3V18A

Temperature 25°C
Testing Circuitry Figure A

1.Graph

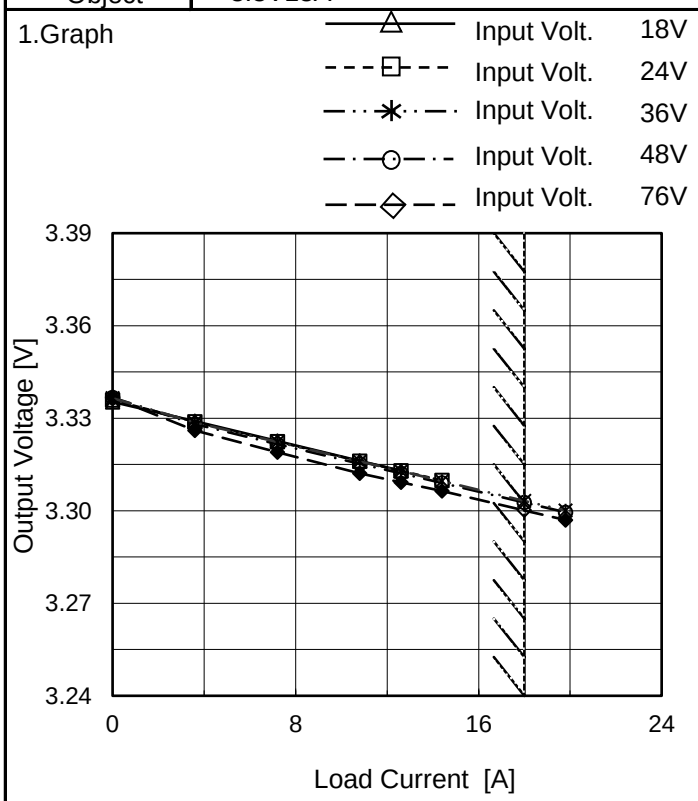

Note: Slanted line shows the range of the rated load current.

2.Values

Load Current [A]	Output Voltage [V] Input Volt. 18[V]	Input Volt. 24[V]	Input Volt. 36[V]	Input Volt. 48[V]	Input Volt. 76[V]
0.0	3.335	3.336	3.337	3.337	3.337
3.6	3.329	3.329	3.329	3.328	3.326
7.2	3.323	3.322	3.322	3.322	3.319
10.8	3.316	3.316	3.316	3.315	3.312
12.6	3.313	3.313	3.313	3.312	3.309
14.4	- ※1	3.310	3.310	3.309	3.306
18.0	- ※1	- ※2	3.303	3.303	3.300
19.8	- ※1	- ※2	3.300	3.300	3.297
--	-	-	-	-	-
--	-	-	-	-	-
--	-	-	-	-	-

※1 Maximam output current at minimum input Voltage is 70% of rated load current.
※2 Maximam output current at 18V input Voltage is 80% of rated load current.
Refer to instruction manuals for details of input derating.

Item	Ripple-Noise
Object	+3.3V18A

Temperature 25°C
Testing Circuitry Figure B

1.Graph

Input Voltage 48V
Load 100%

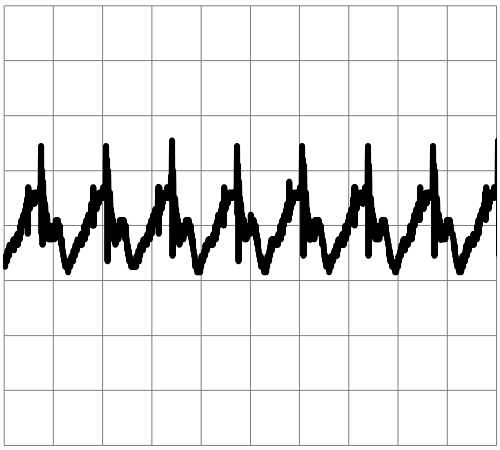

20[mV/div]

5[μs/div]

BC-11728

COSEL

Model	STMGFS80483R3	
Item	Rise and Fall Time	Temperature 25°C Testing Circuitry Figure A
Object	+3.3V18A	

1.Graph

Input Volt. 48 V

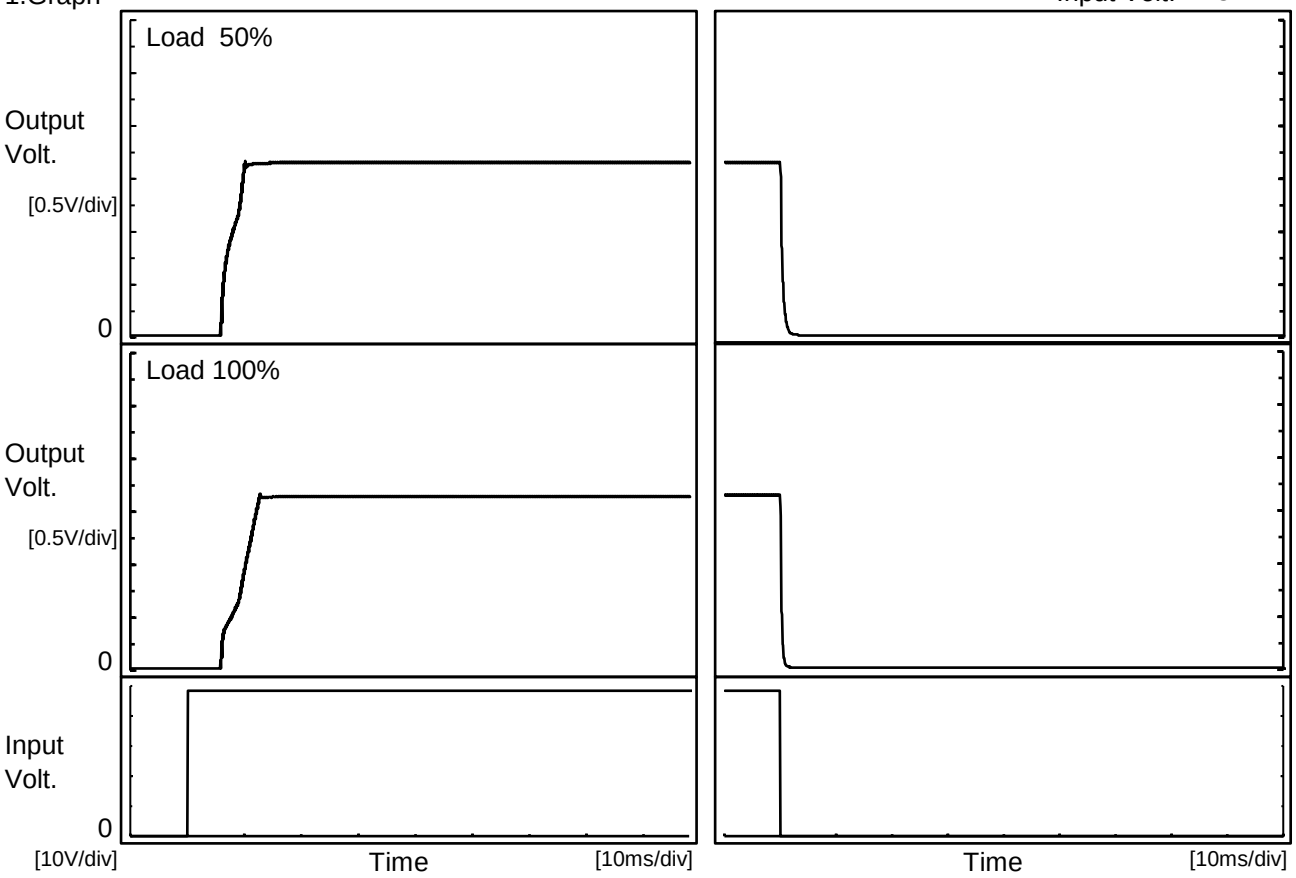

2.Values

[ms]

Load \ Time	Td	Tr	Ts	Th	Tf
50 %	6.0	4.0	10.0	0.2	0.7
100 %	6.2	6.3	12.5	0.1	0.5

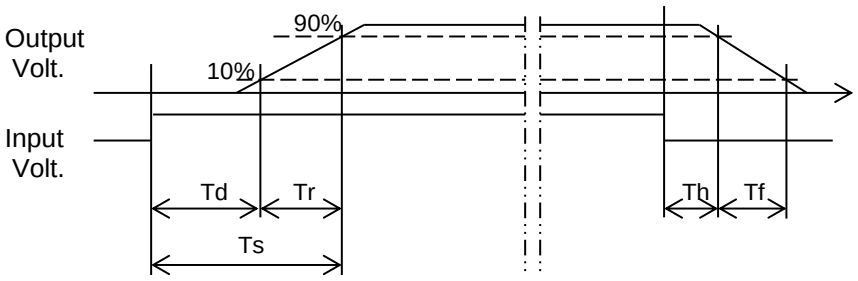

COSEL

Model	STMGFS80483R3
Item	Overcurrent Protection
Object	+3.3V18A

Temperature 25°C
Testing Circuitry Figure A

1.Graph

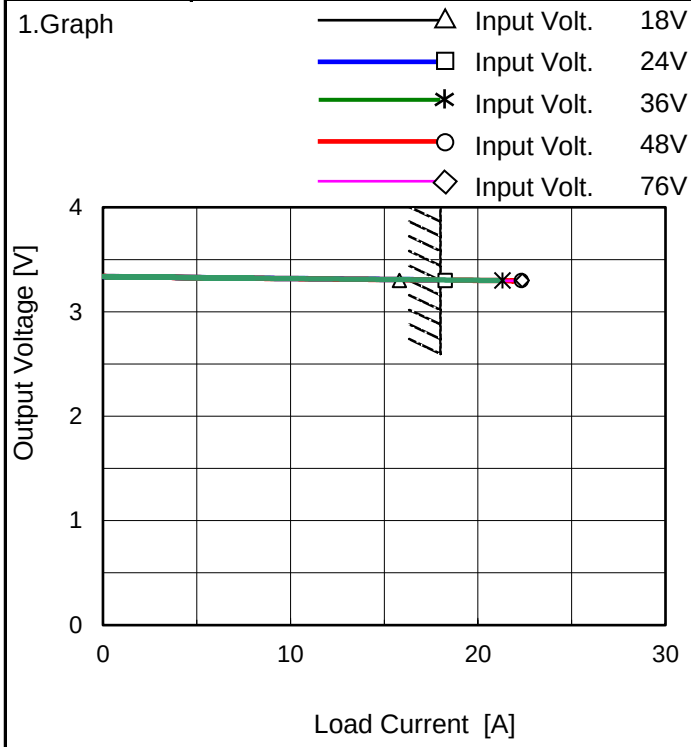

Note: Slanted line shows the range of the rated load current.

Intermittent operation occurs when overcurrent protection is activated.

2.Values

Output Voltage [V]	Load Current [A]				
	Input Volt. 18[V]	Input Volt. 24[V]	Input Volt. 36[V]	Input Volt. 48[V]	Input Volt. 76[V]
3.30	15.810	18.246	21.311	22.307	22.368
3.14	- ※1	- ※2	-	-	-
2.97	-	-	-	-	-
2.64	-	-	-	-	-
2.31	-	-	-	-	-
1.98	-	-	-	-	-
1.65	-	-	-	-	-
1.32	-	-	-	-	-
0.99	-	-	-	-	-
0.66	-	-	-	-	-
0.33	-	-	-	-	-
0.00	-	-	-	-	-

※1 Maximam output current at minimum input Voltage is 70% of rated load current.
※2 Maximam output current at 24V input Voltage is 80% of rated load current.
Refer to instruction manuals for details of input derating.

BC-11728

COSEL

Model	STMGFS80483R3
Item	Ambient Temperature Drift
Object	+3.3V18A

Testing Circuitry Figure A

1.Values

Load 100%

Ambient Temperature[℃]	Output Voltage [V]				
	Input Volt. 18V	Input Volt. 24V	Input Volt. 36V	Input Volt. 48V	Input Volt. 76V
-20	3.311	3.308	3.301	3.300	3.296
25	3.314	3.311	3.304	3.303	3.301
40	3.315	3.312	3.305	3.304	3.302

Note: In case of input Volt.18V, Load 70%. 24V, Load 80%.
Other case Load 100%.

Item	Minimum Input Voltage for Regulated Output Voltage
Object	+3.3V18A

Testing Circuitry Figure A

1.Values

Ambient Temperature[℃]	Input Voltage [V]	
	Load 50%	Load 70%
-20	15.1	15.3
25	15.2	15.3
40	15.2	15.2

Item	Overvoltage Protection
Object	+3.3V18A

Testing Circuitry Figure A

1.Values

Load 0%

Ambient Temperature[℃]	Operating Point [V]				
	Input Volt. 18V	Input Volt. 24V	Input Volt. 36V	Input Volt. 48V	Input Volt. 76V
-20	4.12	4.12	4.12	4.13	4.12
25	4.12	4.12	4.12	4.13	4.12
40	4.12	4.12	4.12	4.13	4.12

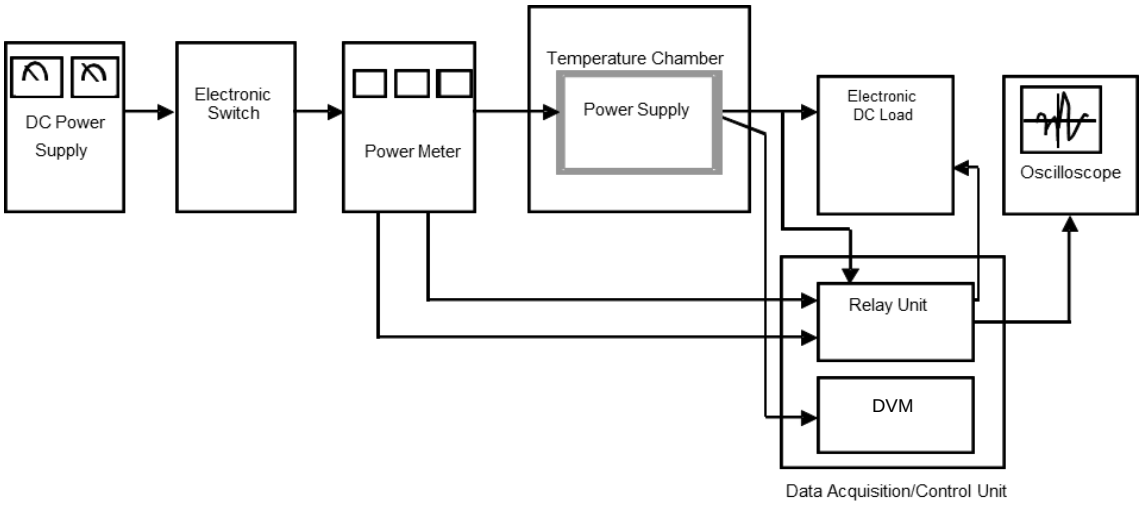

Figure A

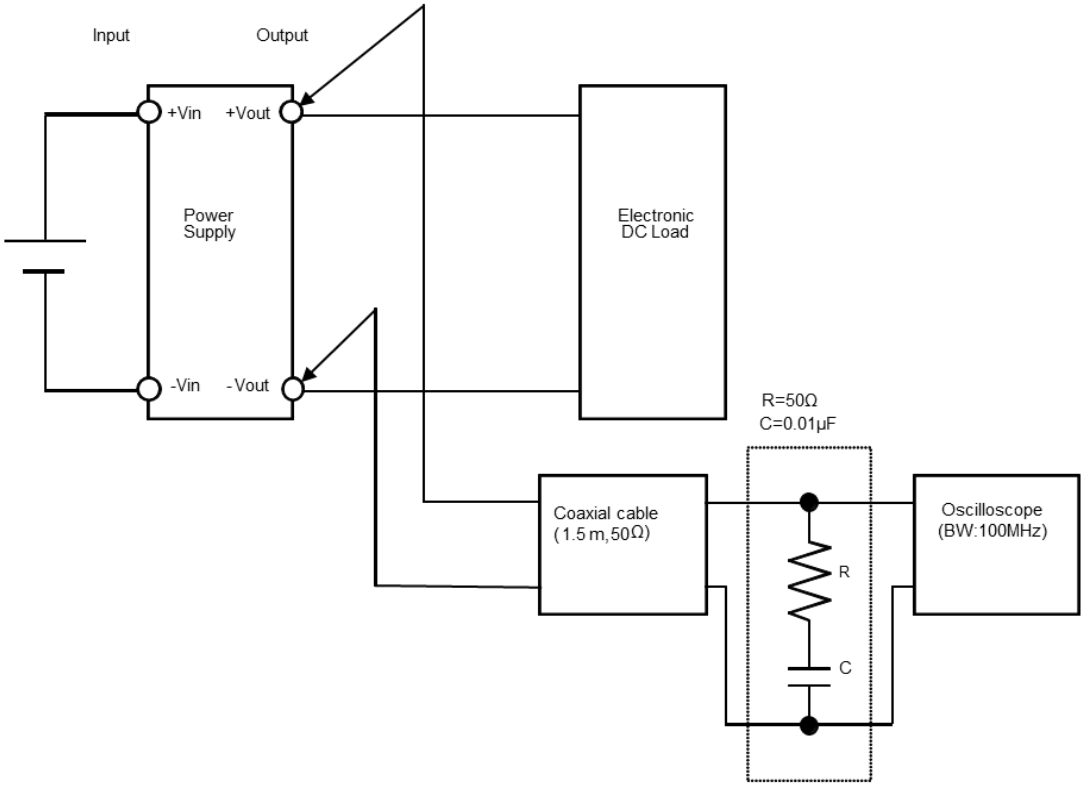

Figure B (Ripple noise Characteristic)