For Reference

TEST DATA OF TECS20F-12

Regulated DC Power Supply
February 20, 2025

Approved by : Tetsuro Hirata
Design Manager

Prepared by : Junichi Otsubo
Design Engineer

COSEL CO.,LTD.

COSEL

CONTENTS

1.Input Current (by Load Current) · 1
2.Efficiency (by Load Current) · 2
3.Power Factor (by Load Current) · 3
4.Inrush Current · 4
5.Leakage Current · 5
6.Line Regulation · 6
7.Load Regulation · 7
8.Ripple-Noise · 7
9.Dynamic Load Response · 8
10.Rise and Fall Time · 9
11.Hold-Up Time · 10
12.Instantaneous Interruption Compensation · · · · · · · · · · · · · · · · · 11
13.Overcurrent Protection · 12
14.Ambient Temperature Drift · 13
15.Minimum Input Voltage for Regulated Output Voltage · · · · · · · · · · 13
16.Overvoltage Protection · 13
17.Figure of Testing Circuitry · 14
(Final Page 15)

COSEL

Model	TECS20F-12
Item	Input Current (by Load Current)
Object	————————

Temperature 25°C
Testing Circuitry Figure A

1.Graph

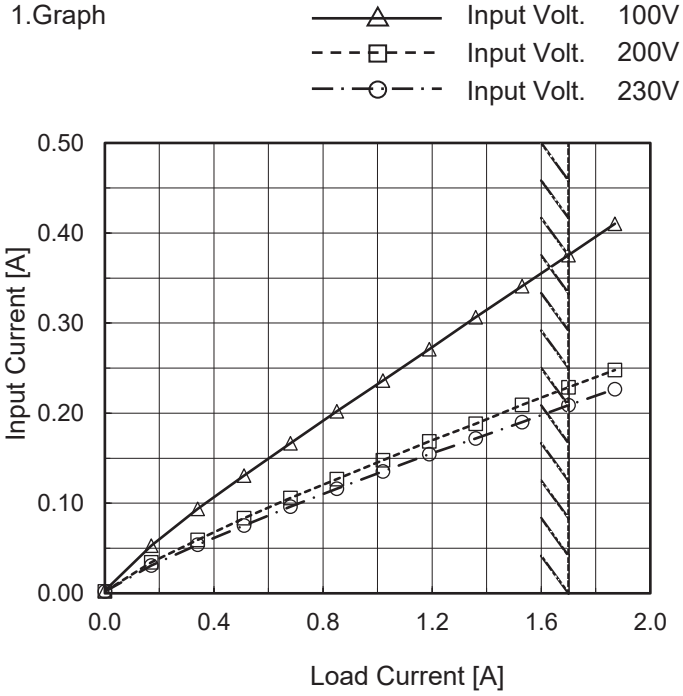

Note: Slanted line shows the range of the rated load current.

2.Values

Load Current [A]	Input Current [A]		
	Input Volt. 100[V]	Input Volt. 200[V]	Input Volt. 230[V]
0.00	0.003	0.002	0.002
0.17	0.053	0.034	0.031
0.34	0.094	0.059	0.054
0.51	0.131	0.083	0.075
0.68	0.167	0.106	0.096
0.85	0.202	0.127	0.116
1.02	0.236	0.148	0.135
1.19	0.271	0.169	0.154
1.36	0.306	0.188	0.172
1.53	0.341	0.209	0.190
1.70	0.375	0.229	0.209
1.87	0.410	0.248	0.227

BC-12087

COSEL

Model	TECS20F-12
Item	Efficiency (by Load Current)
Object	————————

Temperature 25°C
Testing Circuitry Figure A

1.Graph

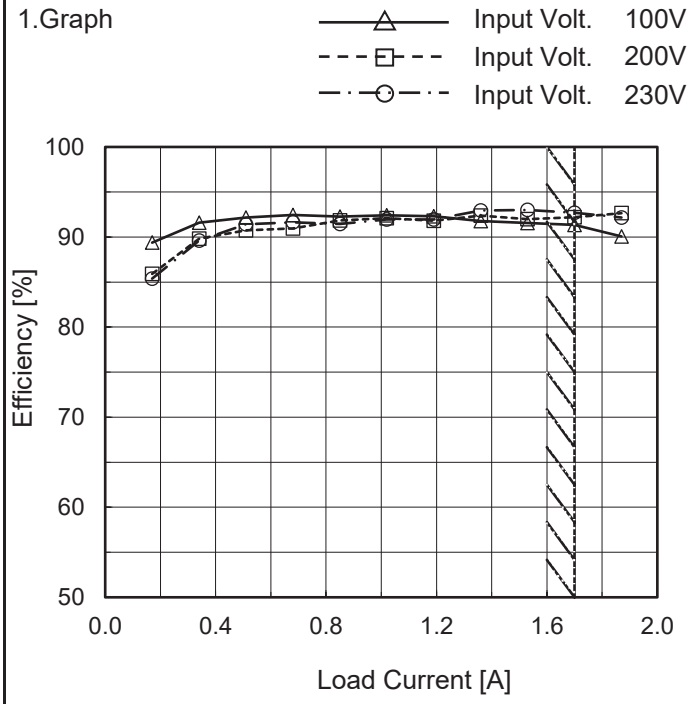

Note: Slanted line shows the range of the rated load current.

2.Values

Load Current [A]	Efficiency [%]		
	Input Volt. 100[V]	Input Volt. 200[V]	Input Volt. 230[V]
0.00	-	-	-
0.17	89.4	85.9	85.4
0.34	91.6	89.8	89.6
0.51	92.2	90.8	91.4
0.68	92.5	91.0	91.6
0.85	92.3	91.8	91.5
1.02	92.4	92.1	91.9
1.19	92.3	91.8	92.0
1.36	91.8	92.4	93.0
1.53	91.5	92.0	93.0
1.70	91.3	92.2	92.7
1.87	90.1	92.6	92.2

COSEL

Model	TECS20F-12
Item	Power Factor (by Load Current)
Object	————————

Temperature 25°C
Testing Circuitry Figure A

1.Graph

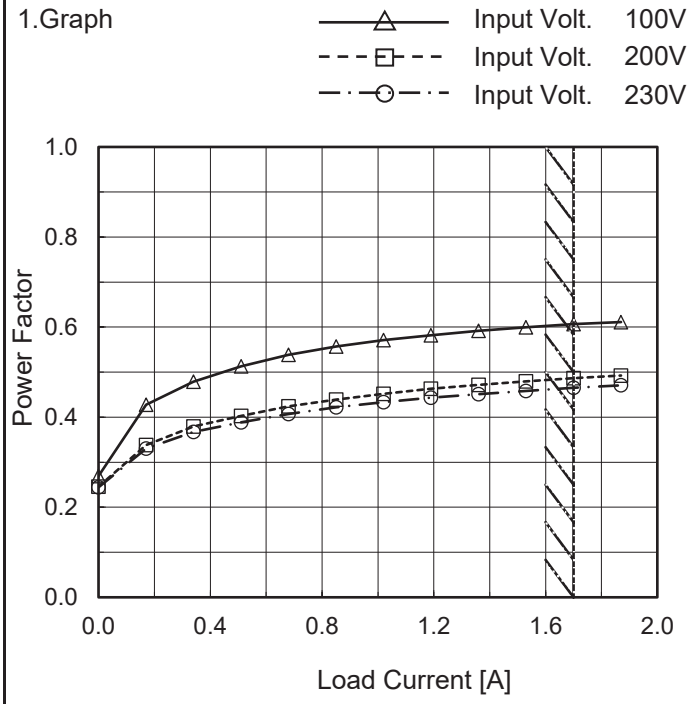

Note: Slanted line shows the range of the rated load current.

2.Values

Load Current [A]	Power Factor		
	Input Volt. 100[V]	Input Volt. 200[V]	Input Volt. 230[V]
0.00	0.269	0.246	0.244
0.17	0.427	0.338	0.330
0.34	0.478	0.379	0.367
0.51	0.513	0.403	0.389
0.68	0.538	0.424	0.407
0.85	0.557	0.439	0.422
1.02	0.571	0.452	0.434
1.19	0.582	0.463	0.443
1.36	0.592	0.471	0.451
1.53	0.600	0.480	0.458
1.70	0.606	0.486	0.465
1.87	0.611	0.492	0.471

COSEL

Model	TECS20F-12	
Item	Inrush Current	Temperature 25°C Testing Circuitry Figure A
Object	————————	

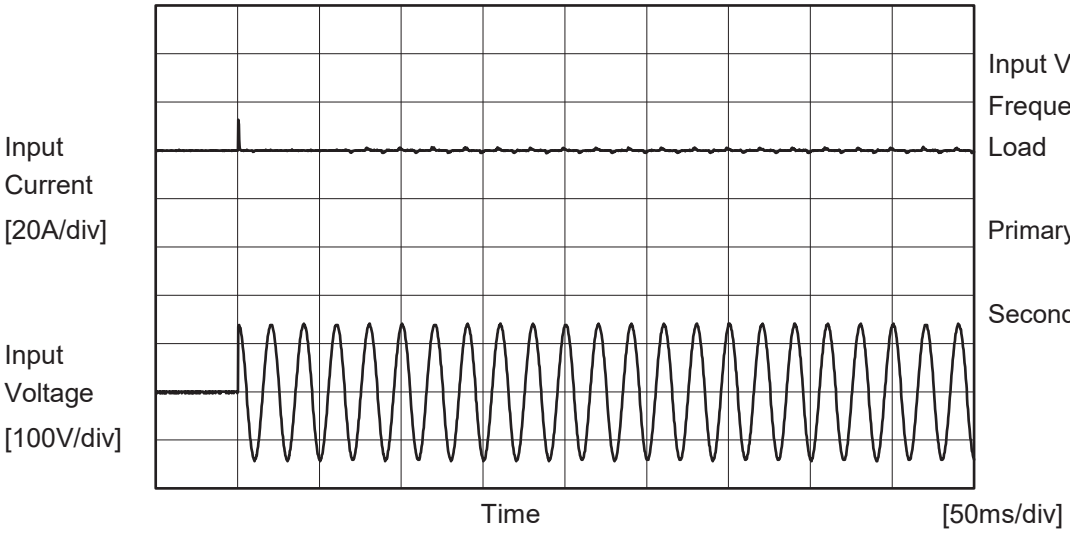

Input Voltage 100 V
Frequency 50 Hz
Load 100 %

Primary inrush current :
12.7 A
Secondary inrush current :
1.5 A

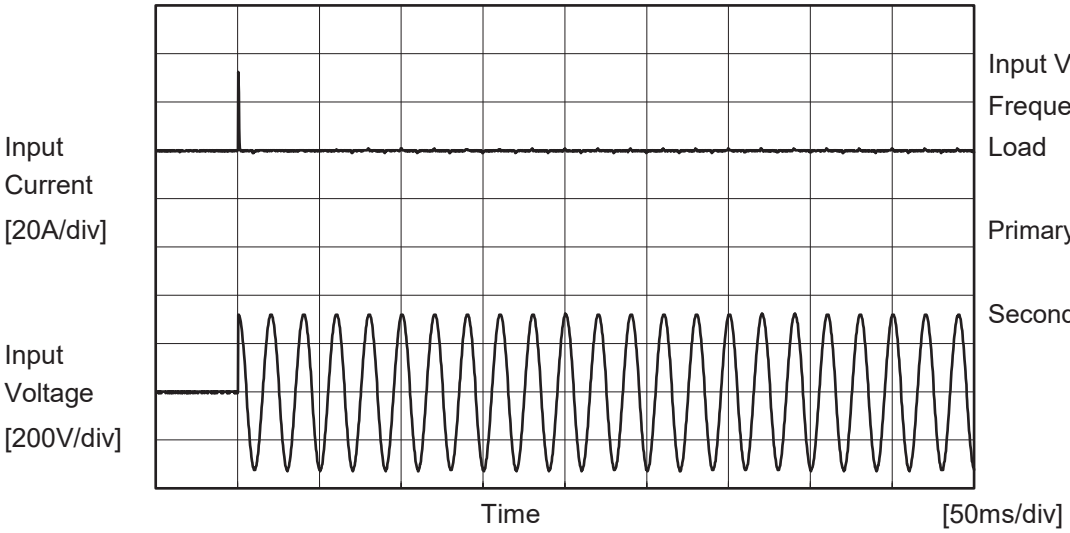

Input Voltage 230 V
Frequency 50 Hz
Load 100 %

Primary inrush current :
32.4 A
Secondary inrush current :
1.2 A

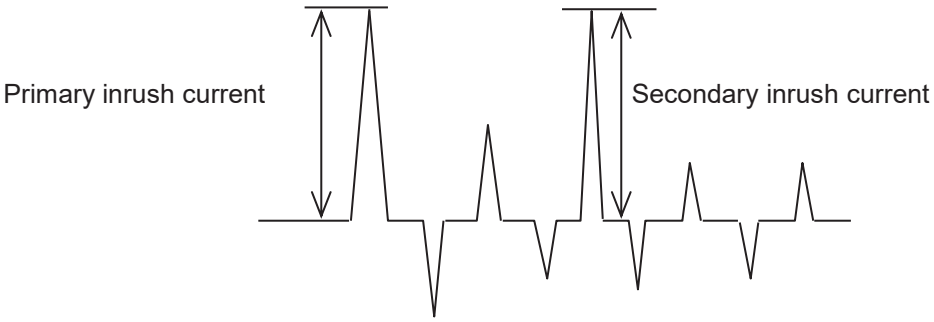

COSEL

Model	TECS20F-12	
Item	Leakage Current	Temperature 25°C Testing Circuitry Figure C
Object	――――――――――	

1.Results

[μA]

Standards	Testing Circuitry	Measuring Method	Input Volt.			Note
			100 [V]	230 [V]	264 [V]	
DEN-AN	Figure C-1	Both phases	23	47	54	Operation
		One of phases	28	70	81	Stand by
IEC62368-1	Figure C-2	Both phases	19	44	52	Operation
		One of phases	28	69	80	Stand by
	Figure C-3	Both phases	19	45	52	Operation
		One of phases	28	69	81	Stand by

The value for "One of phases" is the reference value only.

2.Condition

Leakage current value is concluded after measuring both phases of AC input and by choosing the larger one.

COSEL

Model	TECS20F-12
Item	Line Regulation
Object	+12V1.7A

Temperature 25°C
Testing Circuitry Figure A

1.Graph

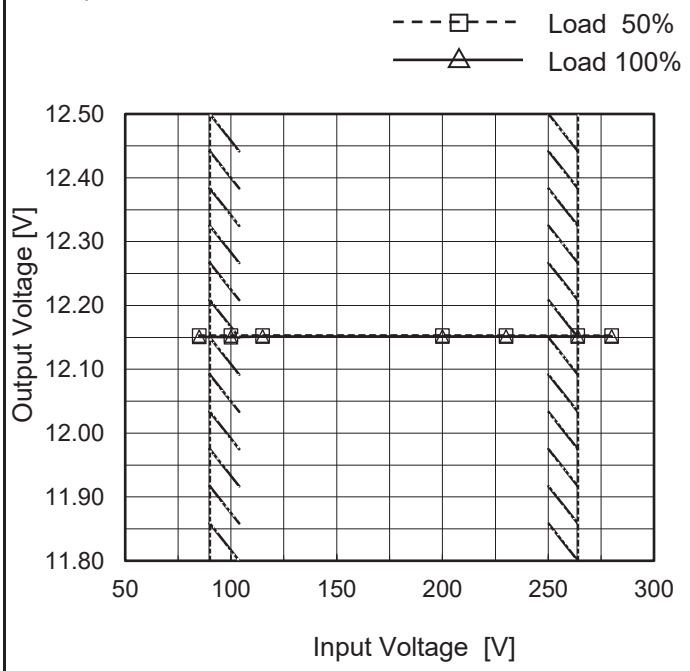

Note: Slanted line shows the range of the rated input voltage.

2.Values

Input Voltage [V]	Output Voltage [V]	
	Load 50%	Load 100%
85	12.153	12.151
100	12.153	12.150
115	12.153	12.151
200	12.153	12.151
230	12.153	12.151
264	12.153	12.151
280	12.153	12.151
--	-	-
--	-	-

BC-12087

COSEL

Model	TECS20F-12
Item	Load Regulation
Object	+12V1.7A

Temperature 25°C
Testing Circuitry Figure A

1.Graph

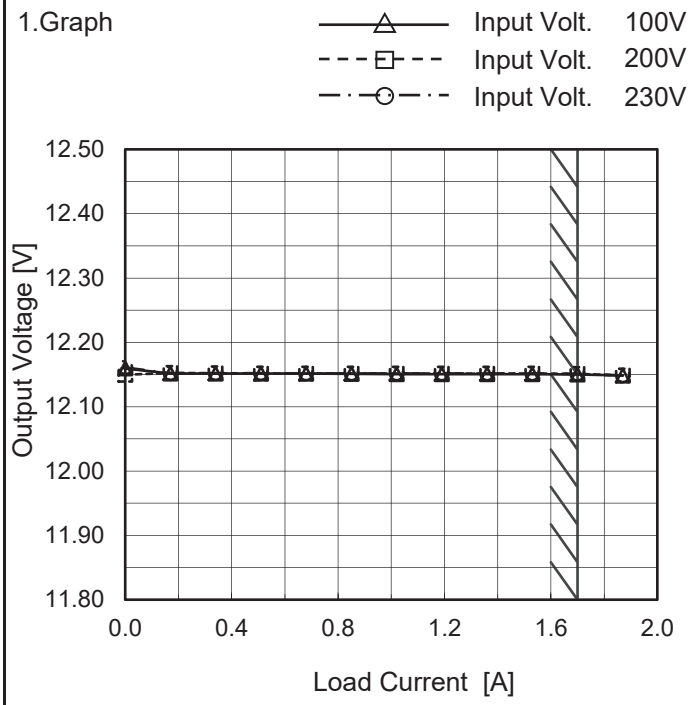

Note: Slanted line shows the range of the rated load current.

2.Values

Load Current [A]	Output Voltage [V]		
	Input Volt. 100[V]	Input Volt. 200[V]	Input Volt. 230[V]
0.00	12.159	12.149	12.161
0.17	12.152	12.153	12.152
0.34	12.152	12.152	12.152
0.51	12.152	12.152	12.152
0.68	12.151	12.152	12.152
0.85	12.151	12.152	12.152
1.02	12.151	12.152	12.152
1.19	12.151	12.152	12.152
1.36	12.151	12.151	12.151
1.53	12.151	12.151	12.151
1.70	12.150	12.151	12.151
1.87	12.149	12.149	12.149

Item	Ripple-Noise
Object	+12V1.7A

Temperature 25°C
Testing Circuitry Figure B

1.Graph

Input Voltage 230V
Load 100%

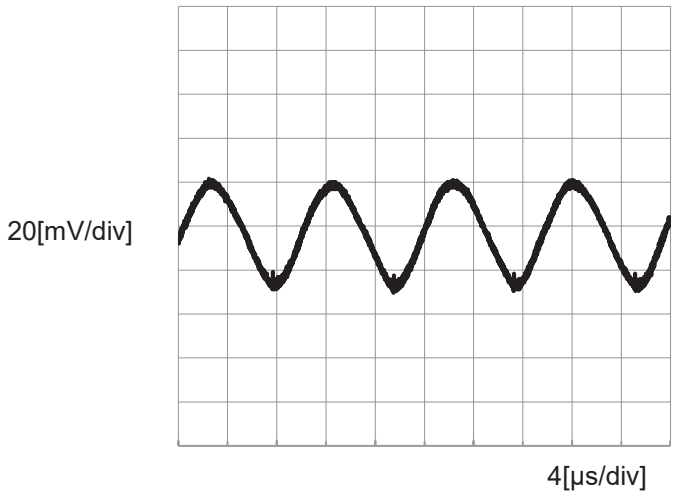

COSEL

Model	TECS20F-12	
Item	Dynamic Load Response	Temperature 25°C Testing Circuitry Figure A
Object	+12V1.7A	

Input Volt. 230 V
Cycle 1000 ms

Response. t1=t2=50µs. Typ

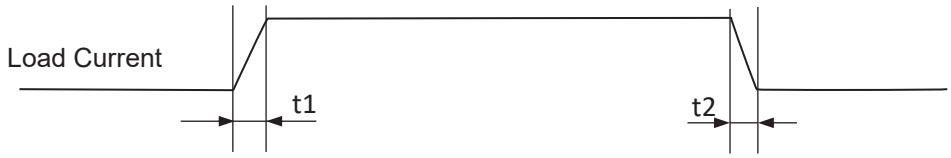

Load 0%(0A) ←→
Load 100%(1.7A)

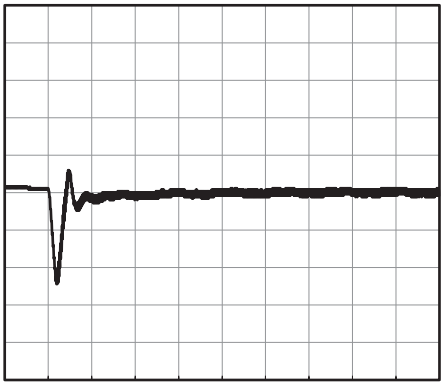

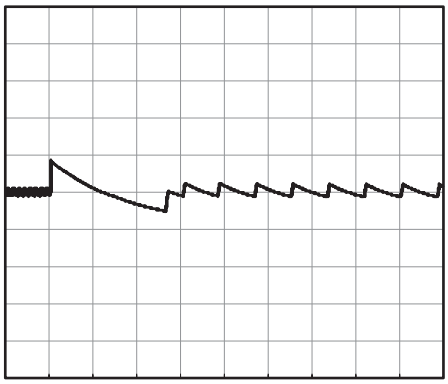

200[mV/div]

1[ms/div]

10[ms/div]

Load 50%(0.85A) ←→
Load 100%(1.7A)

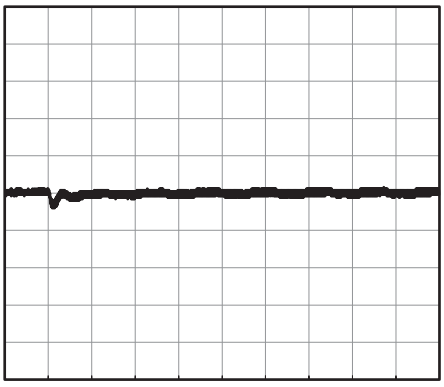

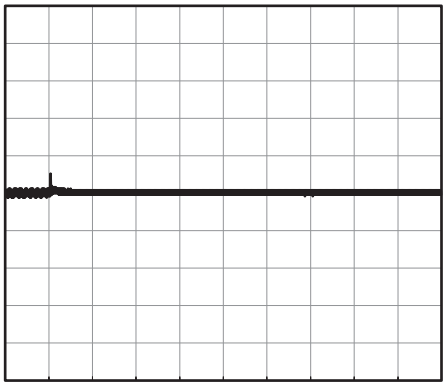

200[mV/div]

1[ms/div]

10[ms/div]

Load 0%(0A) ←→
Load 50%(0.85A)

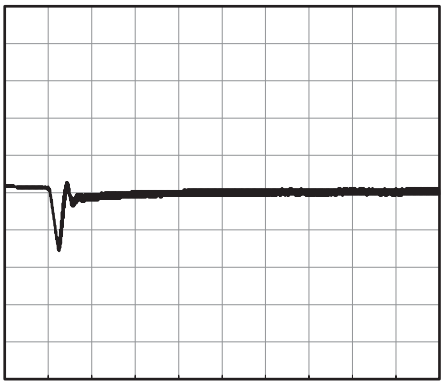

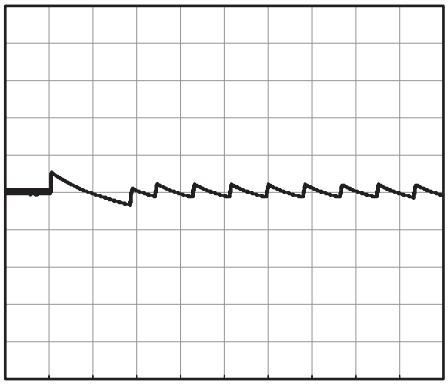

200[mV/div]

1[ms/div]

10[ms/div]

COSEL

Model	TECS20F-12	
Item	Rise and Fall Time	Temperature 25°C Testing Circuitry Figure A
Object	+12V1.7A	

1.Graph

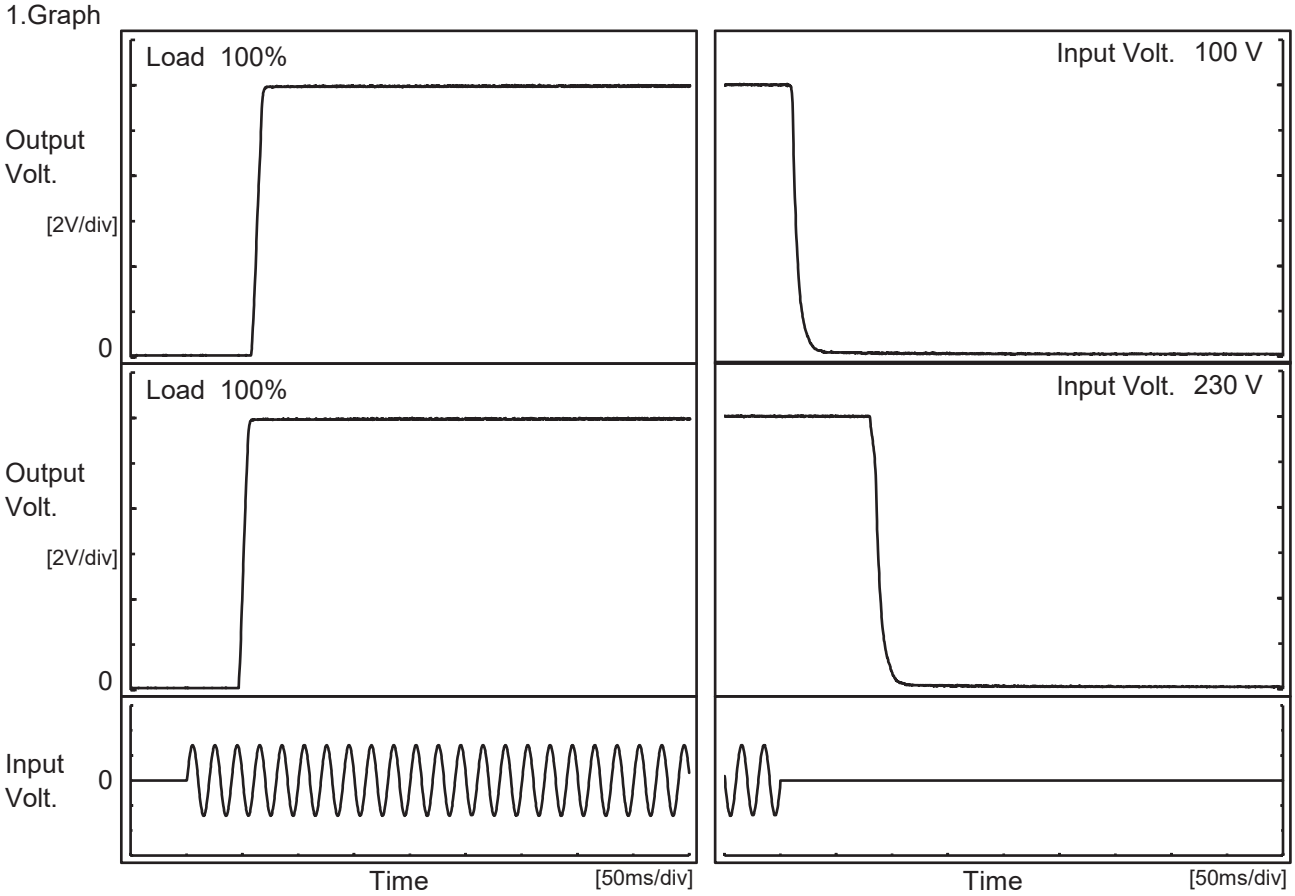

2.Values

[ms]

Input Volt. \ Time	Td	Tr	Ts	Th	Tf
100V	59.0	8.3	67.3	11.3	10.8
230V	47.8	7.3	55.1	83.0	13.8

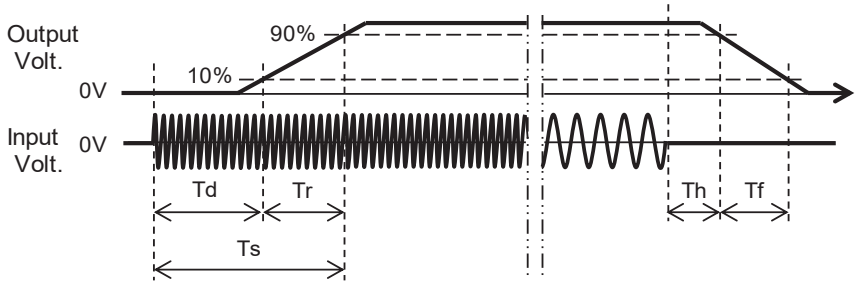

BC-12087

COSEL

Model	TECS20F-12
Item	Hold-Up Time
Object	+12V1.7A

Temperature 25°C
Testing Circuitry Figure A

1.Graph

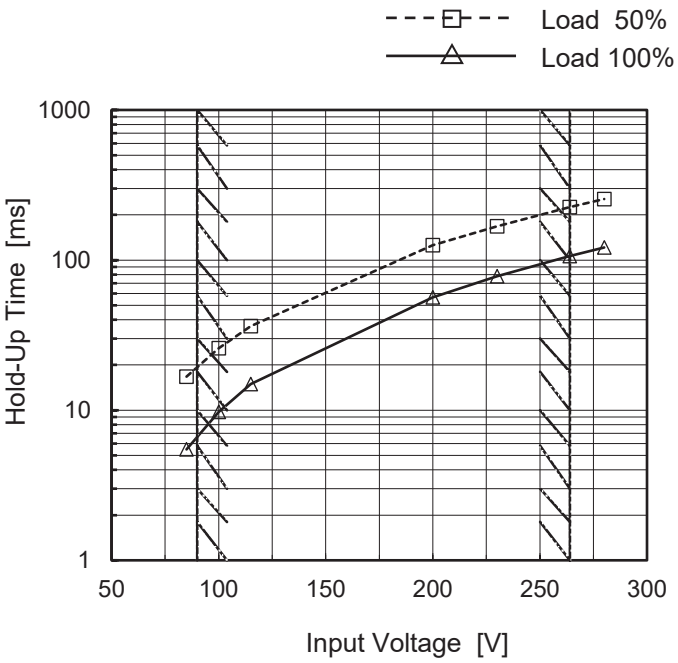

This duration covers from Shut-off of input voltage to the moment when output voltage descends to the rated range of voltage accuracy.
Note: Slanted line shows the range of the rated input voltage.

2.Values

Input Voltage [V]	Hold-Up Time [ms]	
	Load 50%	Load 100%
85	17	5
100	26	10
115	36	15
200	126	56
230	168	78
264	226	107
280	255	121
--	-	-
--	-	-

COSEL

Model	TECS20F-12
Item	Instantaneous Interruption Compensation
Object	+12V1.7A

Temperature 25°C
Testing Circuitry Figure A

1.Graph

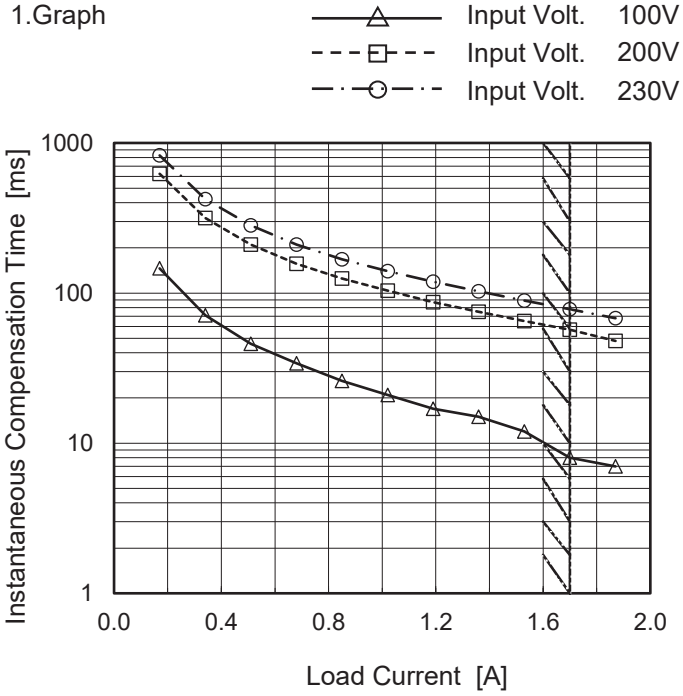

Note: Slanted line shows the range of the rated load current.

2.Values

Load Current [A]	Time [ms]		
	Input Volt. 100[V]	Input Volt. 200[V]	Input Volt. 230[V]
0.00	-	-	-
0.17	146	623	826
0.34	71	317	423
0.51	46	210	283
0.68	34	157	210
0.85	26	125	168
1.02	21	104	140
1.19	17	87	119
1.36	15	75	103
1.53	12	65	89
1.70	8	57	78
1.87	7	48	68

COSEL

Model	TECS20F-12
Item	Overcurrent Protection
Object	+12V1.7A

Temperature 25°C
Testing Circuitry Figure A

1.Graph

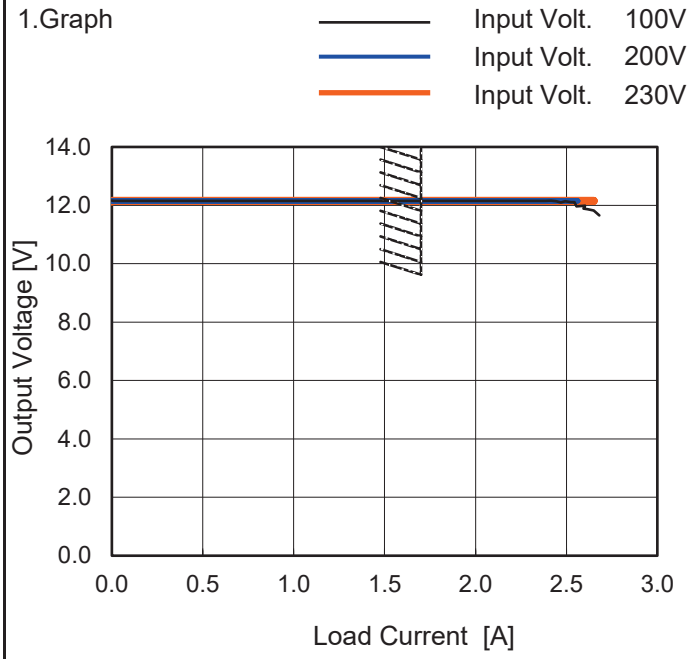

Note: Slanted line shows the range of the rated load current.

Overcurrent protection is Hiccup mode.

2.Values

Output Voltage [V]	Load Current [A]		
	Input Volt. 100[V]	Input Volt. 200[V]	Input Volt. 230[V]
12.0	2.68	2.56	2.65
11.4	-	-	-
10.8	-	-	-
9.6	-	-	-
8.4	-	-	-
7.2	-	-	-
6.0	-	-	-
4.8	-	-	-
3.6	-	-	-
2.4	-	-	-
1.2	-	-	-
0.0	-	-	-

COSEL

Model	TECS20F-12
Item	Ambient Temperature Drift
Object	+12V1.7A

Testing Circuitry Figure A

1.Values

Load 100%

Ambient Temperature[℃]	Output Voltage [V]		
	Input Volt. 100V	Input Volt. 200V	Input Volt. 230V
-20	12.134	12.135	12.135
25	12.141	12.142	12.142
60	12.131	12.133	12.133

Item	Minimum Input Voltage for Regulated Output Voltage
Object	+12V1.7A

Testing Circuitry Figure A

1.Values

Ambient Temperature[℃]	Input Voltage [V]	
	Load 50%	Load 100%
-20	43	62
25	40	59
60	38	58

Item	Overvoltage Protection
Object	+12V1.7A

Testing Circuitry Figure A

1.Values

Load 0%

Ambient Temperature[℃]	Operating Point [V]	
	Input Volt. 100V	Input Volt. 230V
-20	15.61	15.59
25	15.58	15.58
60	15.61	15.58

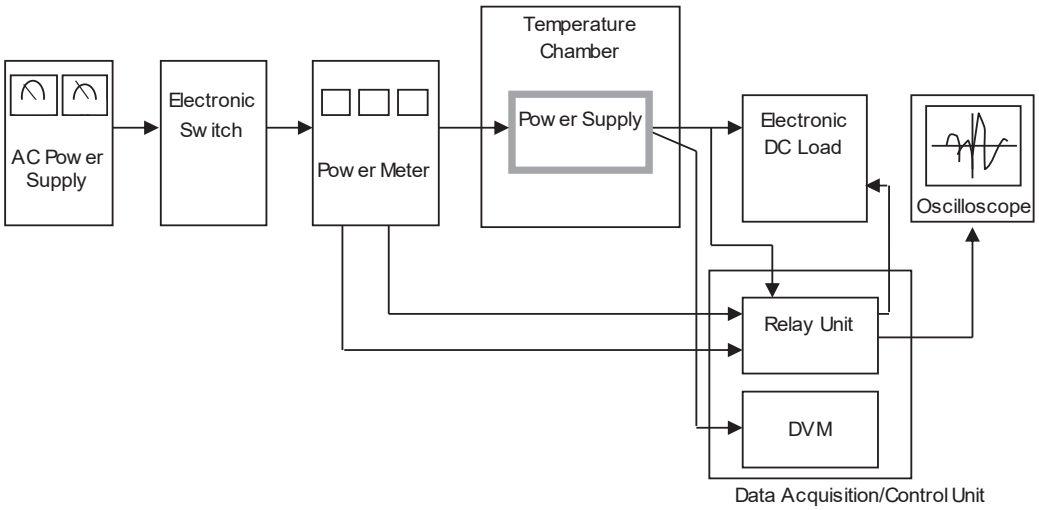

Figure A

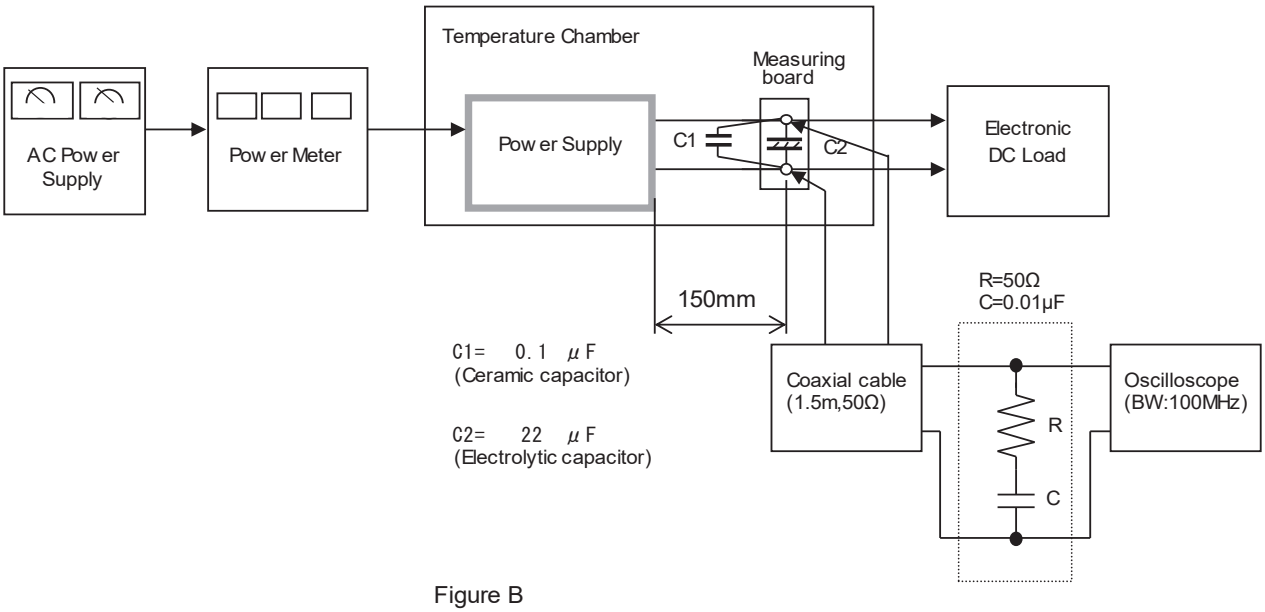

Figure B

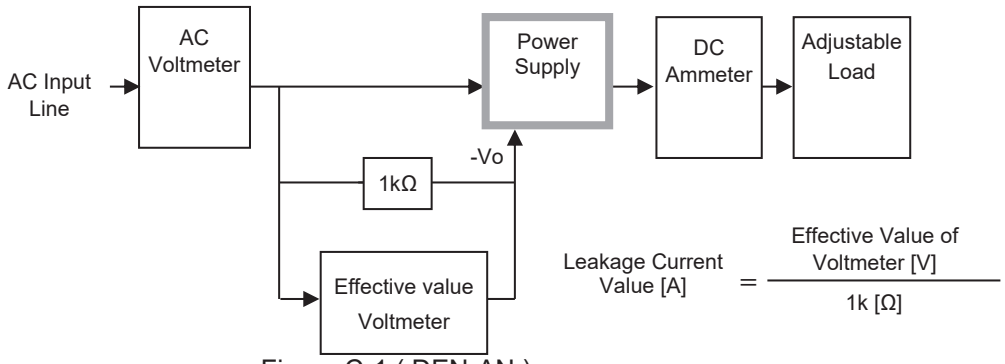

Figure C-1 (DEN-AN)

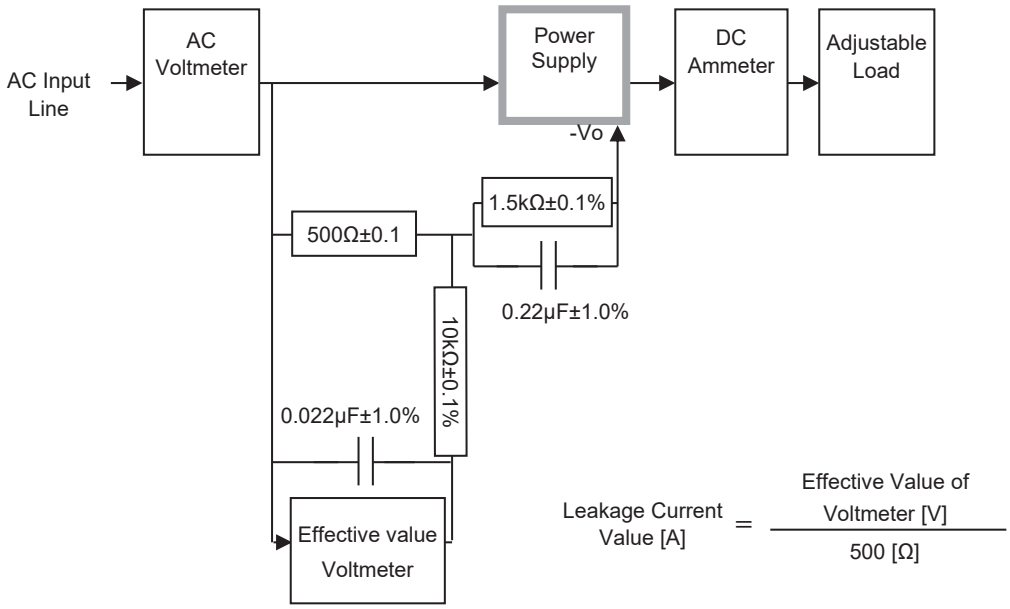

Figure C-2 (IEC62368-1 refer to IEC60990 Fig.4)

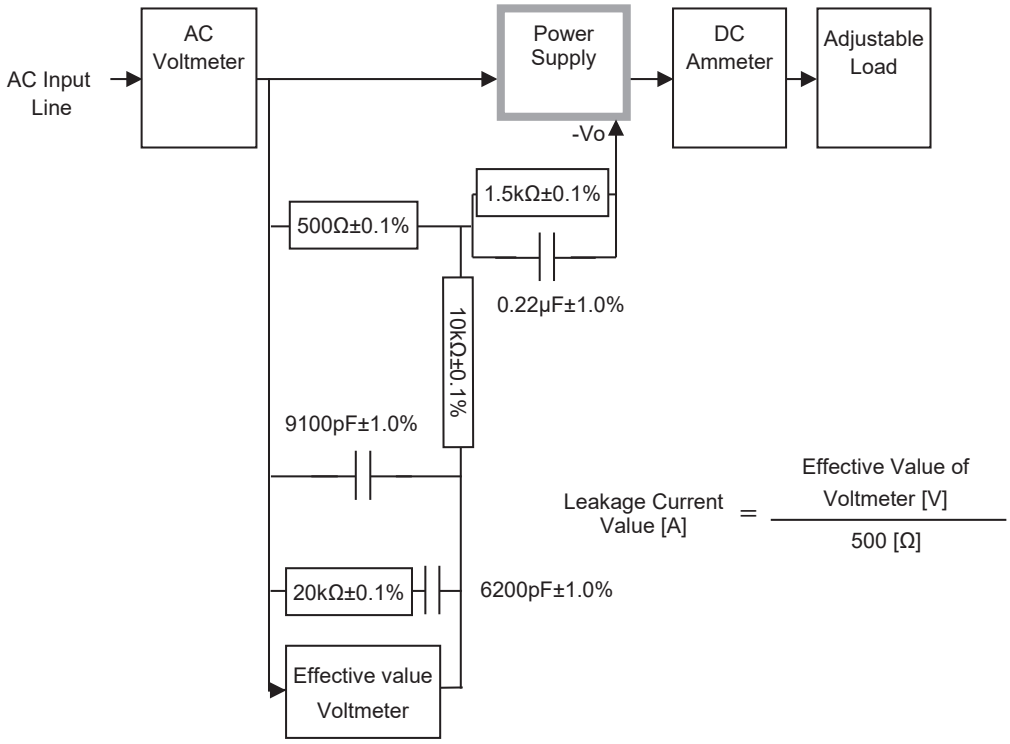

Figure C-3 (IEC62368-1 refer to IEC60990 Fig.5)