For Reference

TEST DATA OF TECS20F-15

Regulated DC Power Supply
February 20, 2025

Approved by : Tetsuro Hirata
Design Manager

Prepared by : Junichi Otsubo
Design Engineer

COSEL CO.,LTD.

COSEL

CONTENTS

1.Input Current (by Load Current) · 1
2.Efficiency (by Load Current) · 2
3.Power Factor (by Load Current) · 3
4.Inrush Current · 4
5.Leakage Current · 5
6.Line Regulation · 6
7.Load Regulation · 7
8.Ripple-Noise · 7
9.Dynamic Load Response · 8
10.Rise and Fall Time · 9
11.Hold-Up Time · 10
12.Instantaneous Interruption Compensation · · · · · · · · · · · · · · · · · 11
13.Overcurrent Protection · 12
14.Ambient Temperature Drift · 13
15.Minimum Input Voltage for Regulated Output Voltage · · · · · · · · · · 13
16.Overvoltage Protection · 13
17.Figure of Testing Circuitry · 14
(Final Page 15)

COSEL

Model	TECS20F-15
Item	Input Current (by Load Current)
Object	――――――

Temperature 25°C
Testing Circuitry Figure A

1.Graph

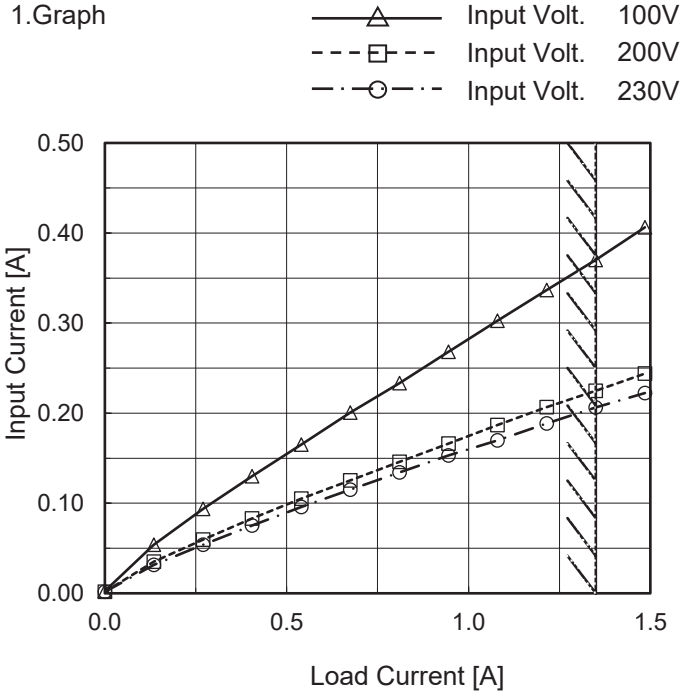

Note: Slanted line shows the range of the rated load current.

2.Values

Load Current [A]	Input Current [A]		
	Input Volt. 100[V]	Input Volt. 200[V]	Input Volt. 230[V]
0.000	0.003	0.002	0.002
0.135	0.054	0.035	0.032
0.270	0.094	0.060	0.054
0.405	0.130	0.083	0.075
0.540	0.165	0.105	0.096
0.675	0.201	0.126	0.115
0.810	0.233	0.146	0.134
0.945	0.268	0.166	0.153
1.080	0.303	0.187	0.170
1.215	0.337	0.207	0.189
1.350	0.370	0.225	0.206
1.485	0.406	0.244	0.222

BC-12088

COSEL

Model	TECS20F-15
Item	Efficiency (by Load Current)
Object	――――――――

Temperature 25°C
Testing Circuitry Figure A

1.Graph

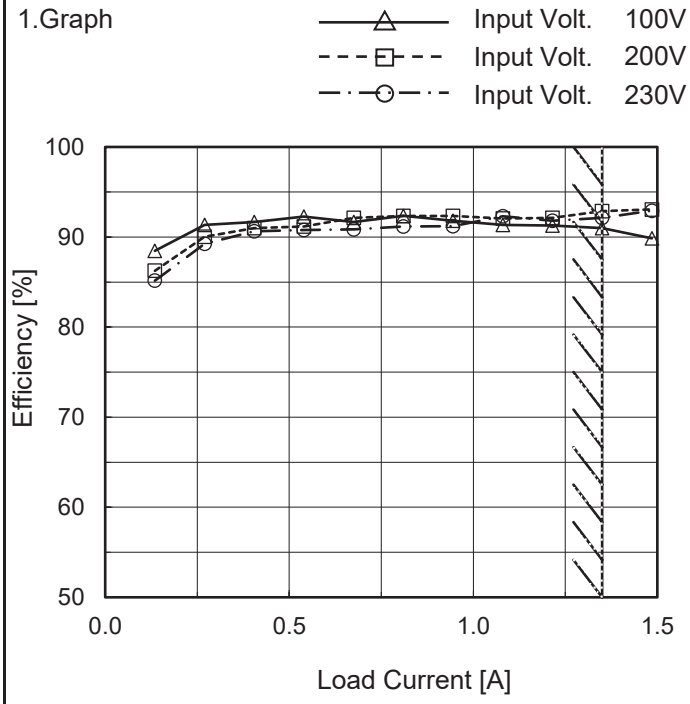

Note: Slanted line shows the range of the rated load current.

2.Values

Load Current [A]	Efficiency [%]		
	Input Volt. 100[V]	Input Volt. 200[V]	Input Volt. 230[V]
0.000	-	-	-
0.135	88.5	86.2	85.2
0.270	91.3	90.0	89.2
0.405	91.7	91.0	90.6
0.540	92.3	91.2	90.8
0.675	91.7	92.1	90.8
0.810	92.4	92.3	91.2
0.945	91.8	92.4	91.2
1.080	91.4	92.1	92.3
1.215	91.3	92.1	91.8
1.350	91.0	92.9	92.1
1.485	89.9	93.1	92.9

COSEL

Model	TECS20F-15
Item	Power Factor (by Load Current)
Object	————————

Temperature 25°C
Testing Circuitry Figure A

1.Graph

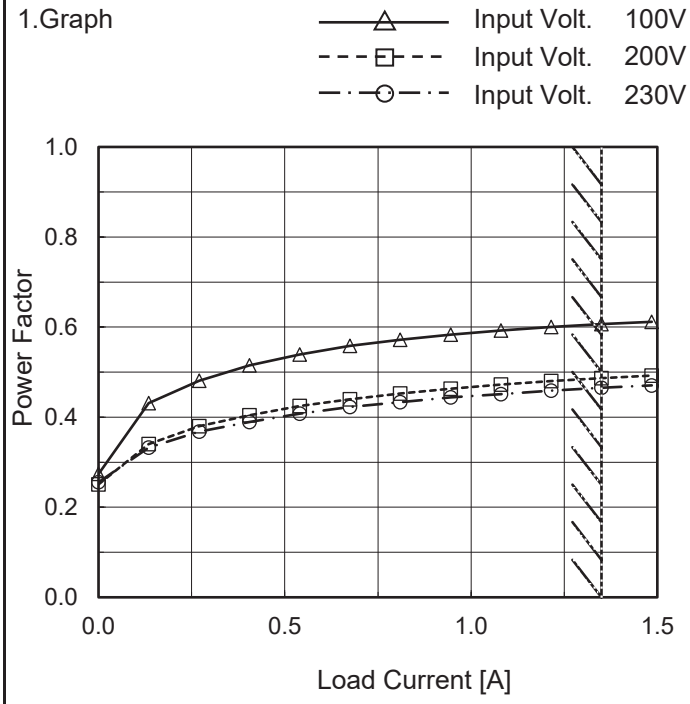

Note: Slanted line shows the range of the rated load current.

2.Values

Load Current [A]	Power Factor		
	Input Volt. 100[V]	Input Volt. 200[V]	Input Volt. 230[V]
0.000	0.274	0.251	0.255
0.135	0.431	0.340	0.332
0.270	0.481	0.380	0.368
0.405	0.515	0.404	0.389
0.540	0.539	0.425	0.408
0.675	0.558	0.440	0.422
0.810	0.572	0.452	0.434
0.945	0.583	0.463	0.444
1.080	0.593	0.473	0.451
1.215	0.600	0.480	0.459
1.350	0.607	0.486	0.465
1.485	0.612	0.492	0.471

COSEL

Model	TECS20F-15	
Item	Inrush Current	Temperature 25°C Testing Circuitry Figure A
Object	————————	

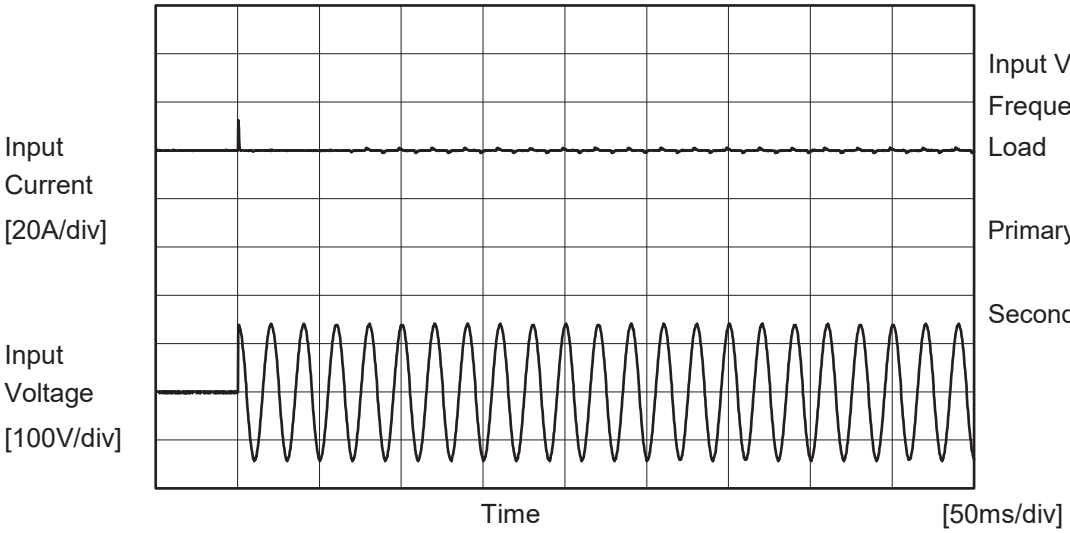

Input Voltage 100 V
Frequency 50 Hz
Load 100 %

Primary inrush current :
12.5 A
Secondary inrush current :
1.2 A

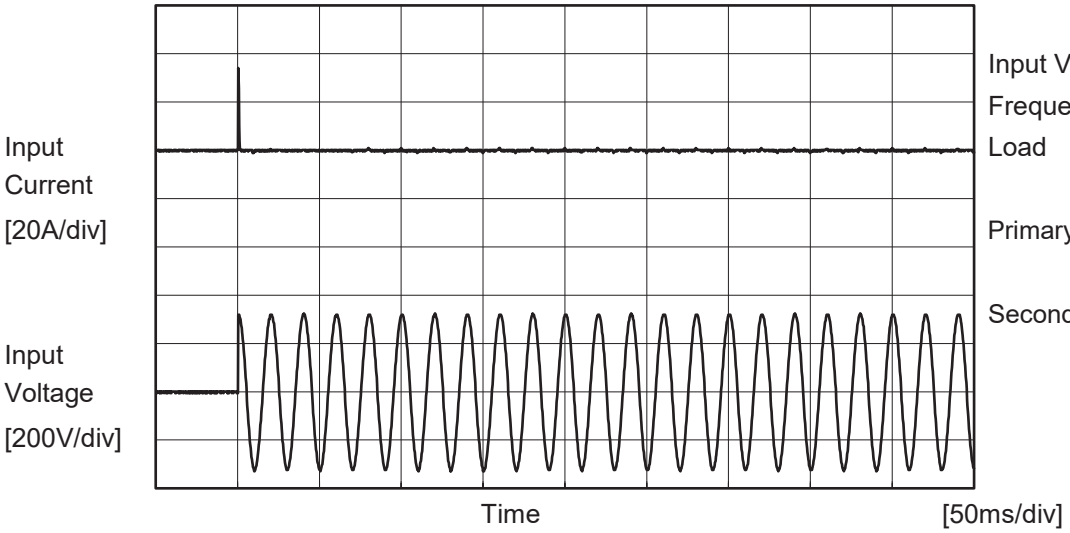

Input Voltage 230 V
Frequency 50 Hz
Load 100 %

Primary inrush current :
34.1 A
Secondary inrush current :
1.1 A

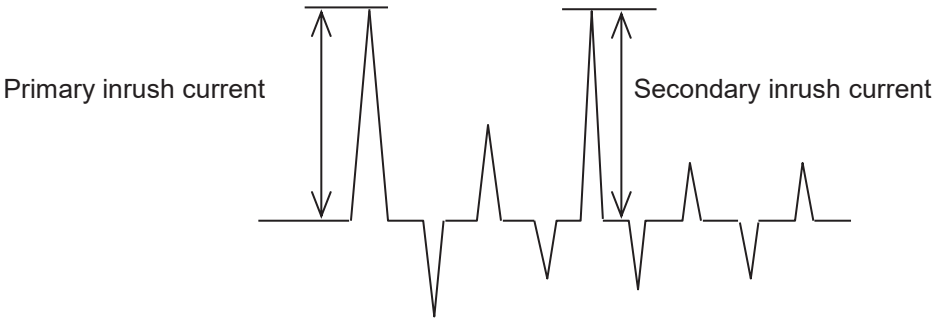

COSEL

Model	TECS20F-15	
Item	Leakage Current	Temperature 25°C Testing Circuitry Figure C
Object	――――――――――	

1.Results

[μA]

Standards	Testing Circuitry	Measuring Method	Input Volt.			Note
			100 [V]	230 [V]	264 [V]	
DEN-AN	Figure C-1	Both phases	23	47	54	Operation
		One of phases	28	70	81	Stand by
IEC62368-1	Figure C-2	Both phases	19	44	52	Operation
		One of phases	28	69	80	Stand by
	Figure C-3	Both phases	19	45	52	Operation
		One of phases	28	69	81	Stand by

The value for "One of phases" is the reference value only.

2.Condition

Leakage current value is concluded after measuring both phases of AC input and by choosing the larger one.

COSEL

Model	TECS20F-15
Item	Line Regulation
Object	+15V1.35A

Temperature 25°C
Testing Circuitry Figure A

1.Graph

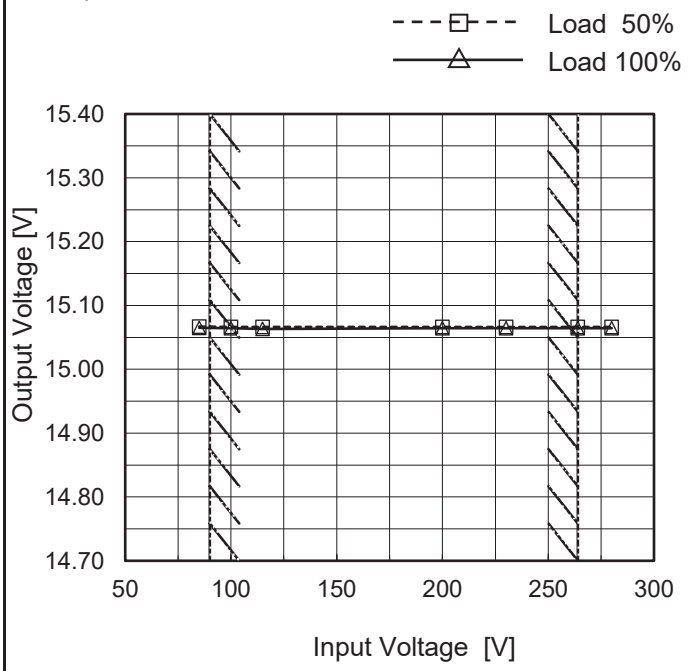

Note: Slanted line shows the range of the rated input voltage.

2.Values

Input Voltage [V]	Output Voltage [V]	
	Load 50%	Load 100%
85	15.067	15.065
100	15.066	15.064
115	15.066	15.063
200	15.066	15.065
230	15.066	15.065
264	15.066	15.065
280	15.066	15.064
--	-	-
--	-	-

COSEL

Model	TECS20F-15
Item	Load Regulation
Object	+15V1.35A

Temperature 25°C
Testing Circuitry Figure A

1.Graph

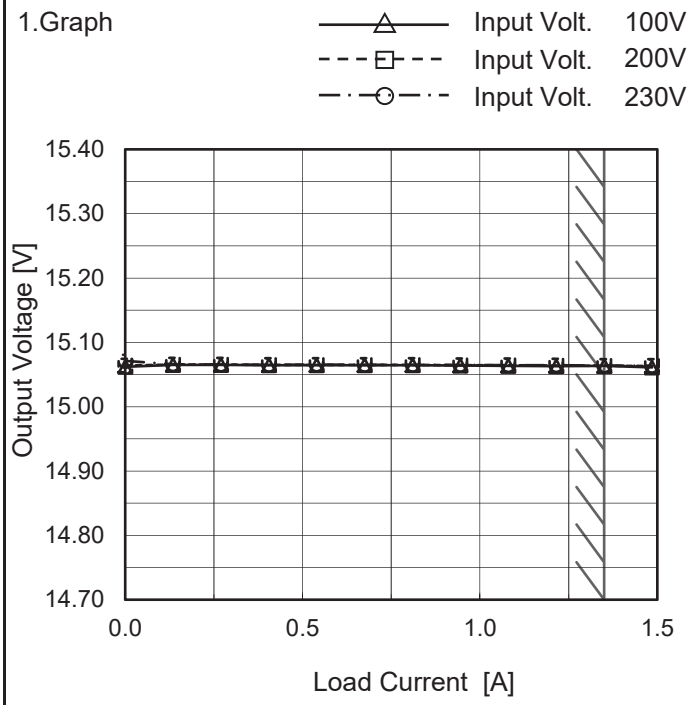

Note: Slanted line shows the range of the rated load current.

2.Values

Load Current [A]	Output Voltage [V]		
	Input Volt. 100[V]	Input Volt. 200[V]	Input Volt. 230[V]
0.000	15.062	15.064	15.071
0.135	15.065	15.066	15.066
0.270	15.065	15.065	15.065
0.405	15.065	15.065	15.065
0.540	15.065	15.065	15.065
0.675	15.065	15.065	15.065
0.810	15.064	15.065	15.065
0.945	15.064	15.065	15.065
1.080	15.064	15.065	15.065
1.215	15.063	15.064	15.064
1.350	15.063	15.064	15.064
1.485	15.061	15.063	15.064

Item	Ripple-Noise
Object	+15V1.35A

Temperature 25°C
Testing Circuitry Figure B

1.Graph

Input Voltage 230V
Load 100%

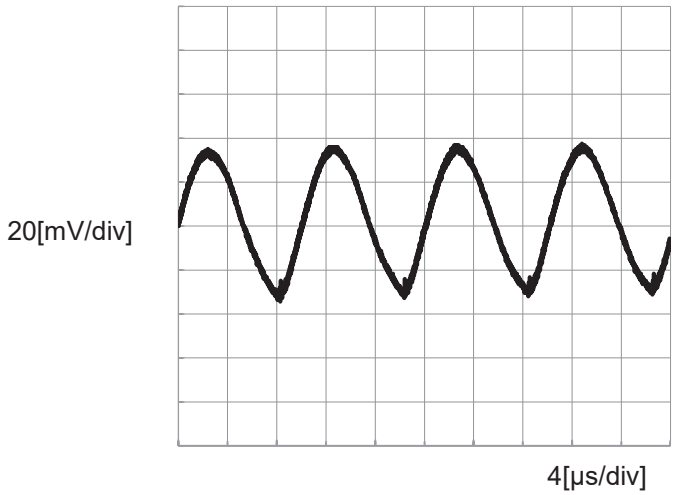

BC-12088

COSEL

Model	TECS20F-15	
Item	Dynamic Load Response	Temperature 25°C Testing Circuitry Figure A
Object	+15V1.35A	

Input Volt. 230 V
Cycle 1000 ms

Response. t1=t2=50µs. Typ

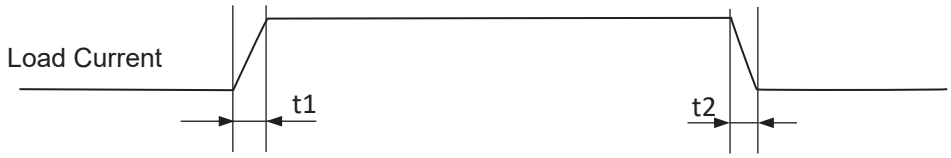

Load 0%(0A) ←→
Load 100%(1.35A)

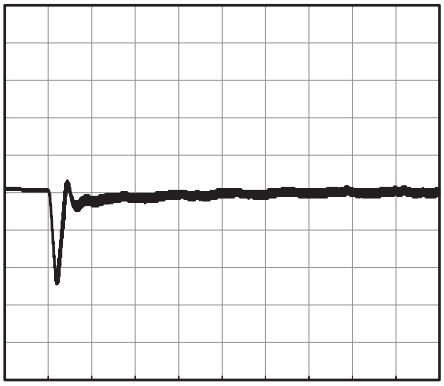

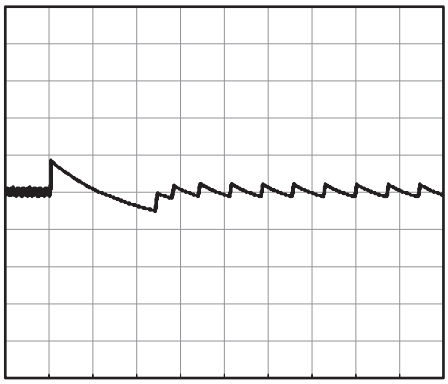

200[mV/div]

1[ms/div]

10[ms/div]

Load 50%(0.675A) ←→
Load 100%(1.35A)

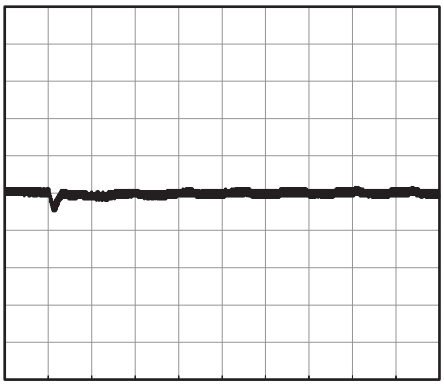

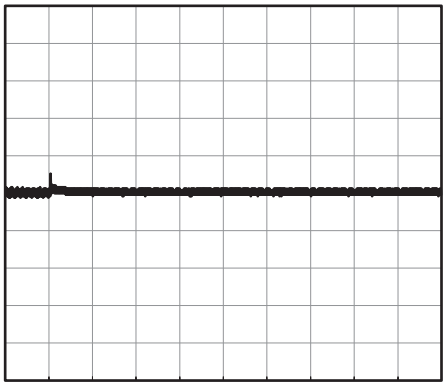

200[mV/div]

1[ms/div]

10[ms/div]

Load 0%(0A) ←→
Load 50%(0.675A)

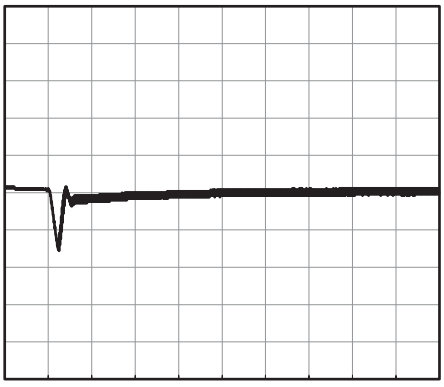

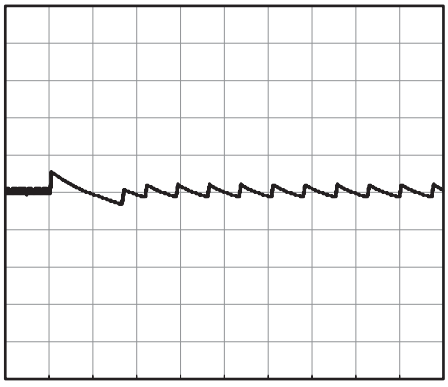

200[mV/div]

1[ms/div]

10[ms/div]

COSEL

Model	TECS20F-15	
Item	Rise and Fall Time	Temperature 25°C Testing Circuitry Figure A
Object	+15V1.35A	

1.Graph

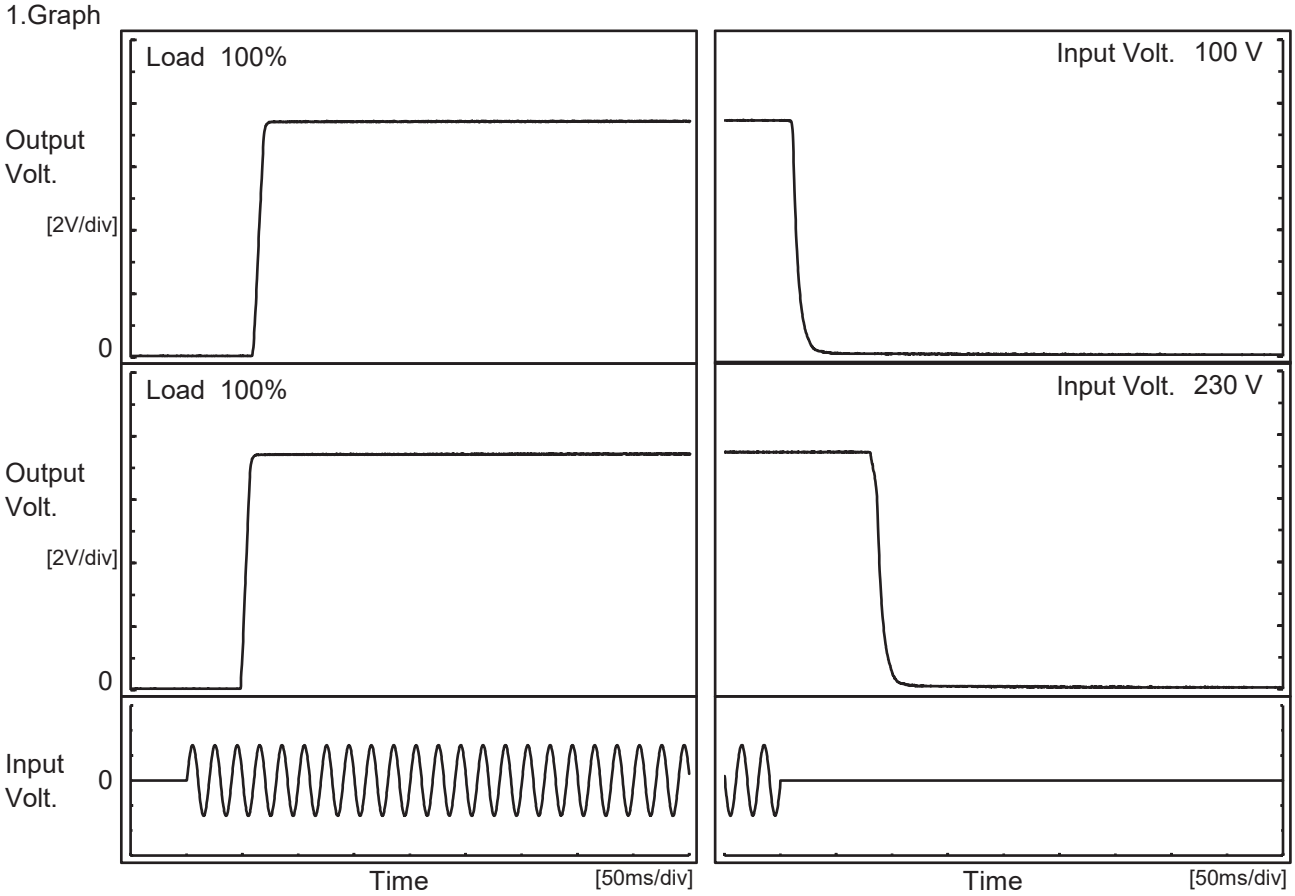

2.Values

[ms]

Input Volt. \ Time	Td	Tr	Ts	Th	Tf
100V	60.5	8.3	68.8	11.5	11.5
230V	49.3	7.5	56.8	84.3	13.8

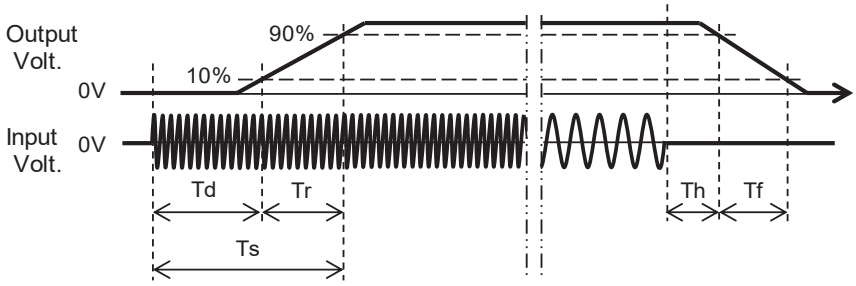

BC-12088

COSEL

Model	TECS20F-15
Item	Hold-Up Time
Object	+15V1.35A

Temperature 25°C
Testing Circuitry Figure A

1.Graph

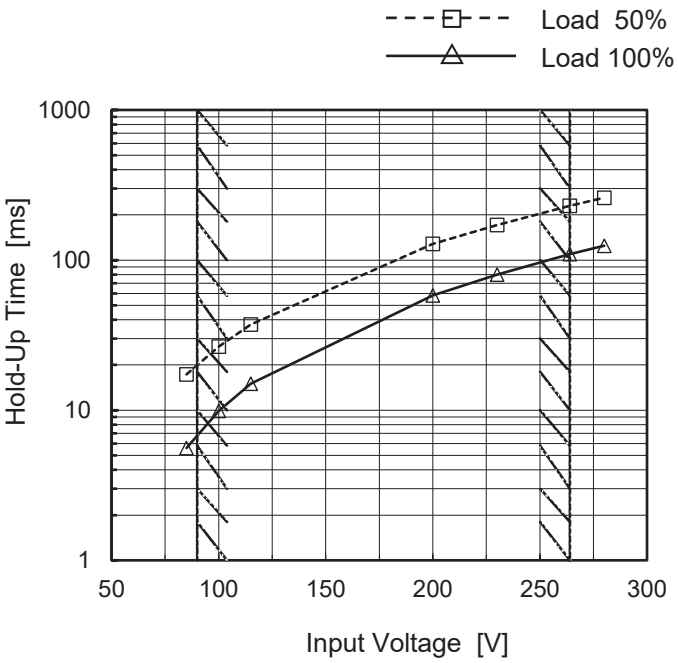

This duration covers from Shut-off of input voltage to the moment when output voltage descends to the rated range of voltage accuracy.
Note: Slanted line shows the range of the rated input voltage.

2.Values

Input Voltage [V]	Hold-Up Time [ms]	
	Load 50%	Load 100%
85	17	6
100	27	10
115	37	15
200	128	58
230	172	80
264	230	109
280	260	125
--	-	-
--	-	-

BC-12088

COSEL

Model	TECS20F-15
Item	Instantaneous Interruption Compensation
Object	+15V1.35A

Temperature 25°C
Testing Circuitry Figure A

1.Graph

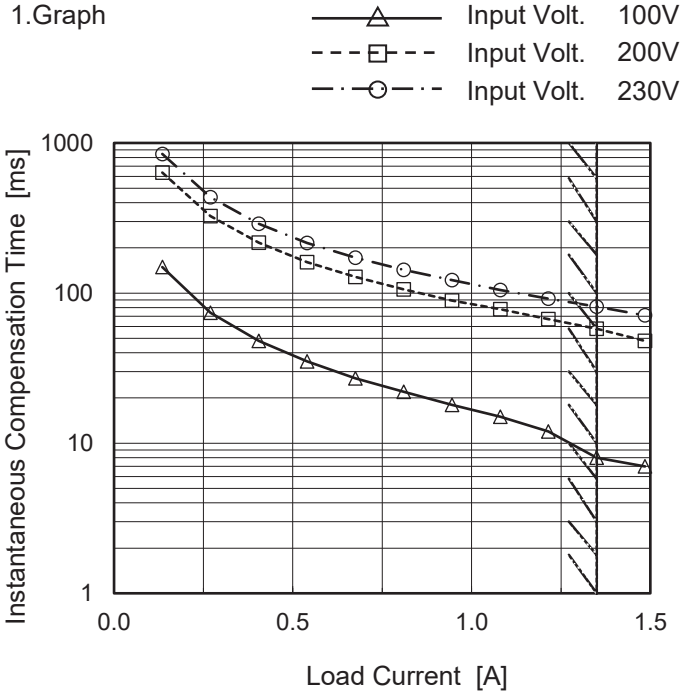

Note: Slanted line shows the range of the rated load current.

2.Values

Load Current [A]	Time [ms]		
	Input Volt. 100[V]	Input Volt. 200[V]	Input Volt. 230[V]
0.000	-	-	-
0.135	149	635	845
0.270	74	325	435
0.405	48	217	289
0.540	35	161	216
0.675	27	128	172
0.810	22	106	143
0.945	18	89	122
1.080	15	78	105
1.215	12	67	92
1.350	8	58	81
1.485	7	48	71

BC-12088

COSEL

Model	TECS20F-15
Item	Overcurrent Protection
Object	+15V1.35A

Temperature 25°C
Testing Circuitry Figure A

1.Graph

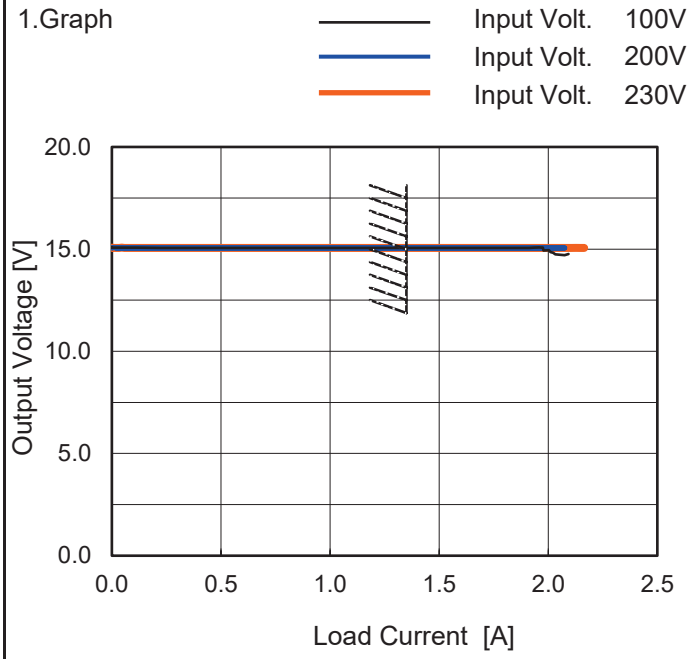

Note: Slanted line shows the range of the rated load current.

Overcurrent protection is Hiccup mode.

2.Values

Output Voltage [V]	Load Current [A]		
	Input Volt. 100[V]	Input Volt. 200[V]	Input Volt. 230[V]
15.0	2.09	2.07	2.16
14.5	-	-	-
14.0	-	-	-
13.0	-	-	-
12.0	-	-	-
11.0	-	-	-
10.0	-	-	-
8.0	-	-	-
6.0	-	-	-
4.0	-	-	-
2.0	-	-	-
1.0	-	-	-

COSEL

Model	TECS20F-15
Item	Ambient Temperature Drift
Object	+15V1.35A

Testing Circuitry Figure A

1.Values

Load 100%

Ambient Temperature[℃]	Output Voltage [V]		
	Input Volt. 100V	Input Volt. 200V	Input Volt. 230V
-20	15.064	15.065	15.065
25	15.058	15.059	15.059
60	15.042	15.044	15.044

Item	Minimum Input Voltage for Regulated Output Voltage
Object	+15V1.35A

Testing Circuitry Figure A

1.Values

Ambient Temperature[℃]	Input Voltage [V]	
	Load 50%	Load 100%
-20	41	61
25	40	60
60	38	57

Item	Overvoltage Protection
Object	+15V1.35A

Testing Circuitry Figure A

1.Values

Load 0%

Ambient Temperature[℃]	Operating Point [V]	
	Input Volt. 100V	Input Volt. 230V
-20	18.85	18.90
25	19.44	19.44
60	19.87	19.87

COSEL

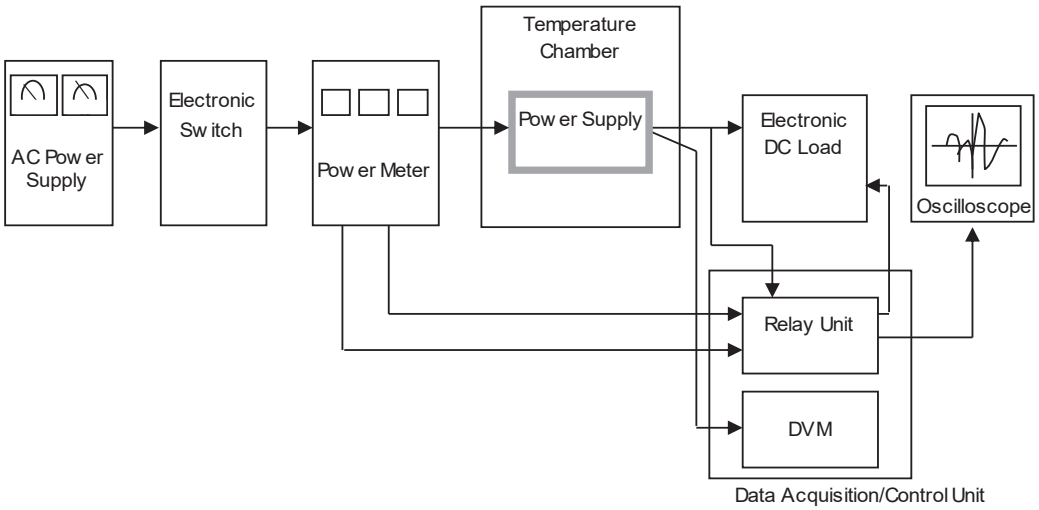

Figure A

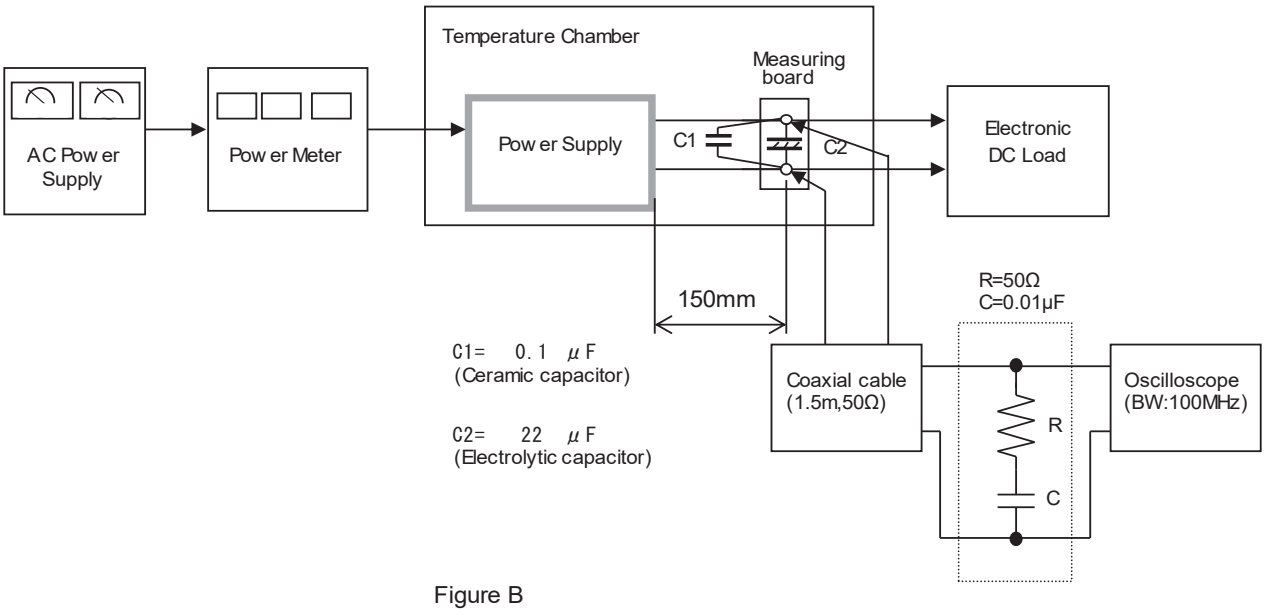

Figure B

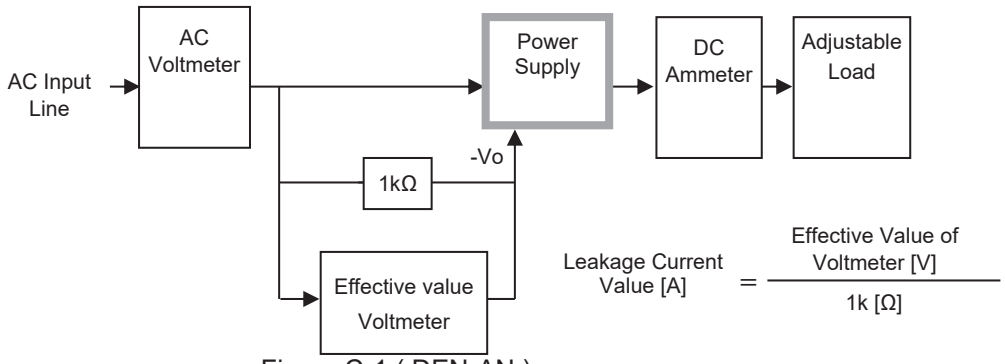

Figure C-1 (DEN-AN)

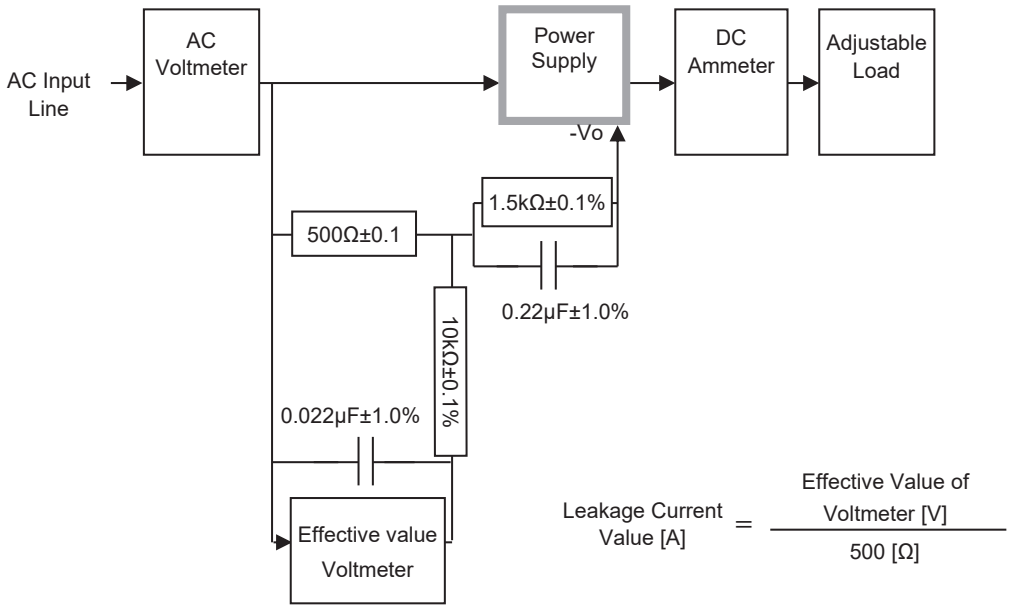

Figure C-2 (IEC62368-1 refer to IEC60990 Fig.4)

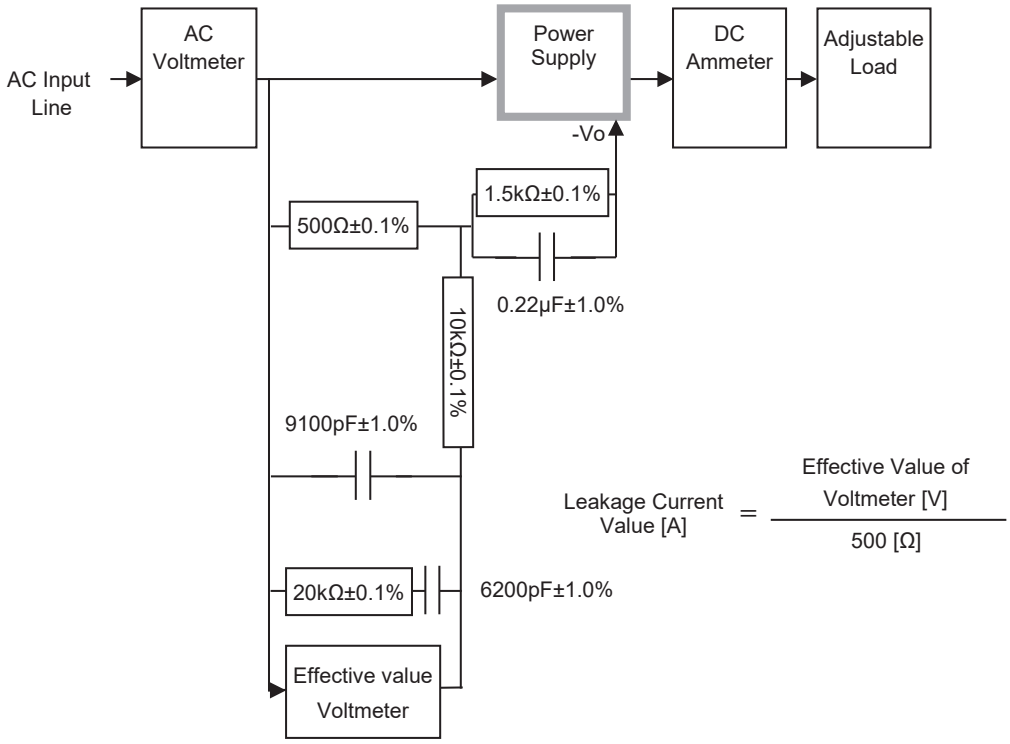

Figure C-3 (IEC62368-1 refer to IEC60990 Fig.5)