For Reference

TEST DATA OF TECS20F-24

Regulated DC Power Supply
February 20, 2025

Approved by : Tetsuro Hirata
Design Manager

Prepared by : Junichi Otsubo
Design Engineer

COSEL CO.,LTD.

COSEL

CONTENTS

1.Input Current (by Load Current) · 1
2.Efficiency (by Load Current) · 2
3.Power Factor (by Load Current) · 3
4.Inrush Current · 4
5.Leakage Current · 5
6.Line Regulation · 6
7.Load Regulation · 7
8.Ripple-Noise · 7
9.Dynamic Load Response · 8
10.Rise and Fall Time · 9
11.Hold-Up Time · 10
12.Instantaneous Interruption Compensation · · · · · · · · · · · · · · · · · 11
13.Overcurrent Protection · 12
14.Ambient Temperature Drift · 13
15.Minimum Input Voltage for Regulated Output Voltage · · · · · · · · · · 13
16.Overvoltage Protection · 13
17.Figure of Testing Circuitry · 14
(Final Page 15)

COSEL

Model	TECS20F-24
Item	Input Current (by Load Current)
Object	————————

Temperature 25°C
Testing Circuitry Figure A

1.Graph

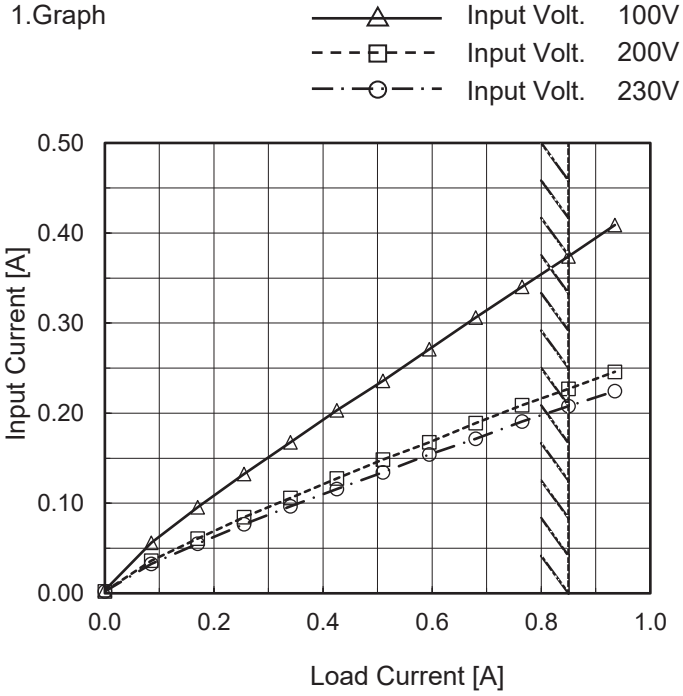

Note: Slanted line shows the range of the rated load current.

2.Values

Load Current [A]	Input Current [A]		
	Input Volt. 100[V]	Input Volt. 200[V]	Input Volt. 230[V]
0.000	0.003	0.002	0.002
0.085	0.056	0.036	0.033
0.170	0.096	0.061	0.055
0.255	0.132	0.084	0.077
0.340	0.168	0.106	0.097
0.425	0.203	0.128	0.116
0.510	0.236	0.148	0.134
0.595	0.271	0.168	0.154
0.680	0.306	0.189	0.172
0.765	0.340	0.209	0.191
0.850	0.374	0.227	0.208
0.935	0.409	0.246	0.224

BC-12089

COSEL

Model	TECS20F-24
Item	Efficiency (by Load Current)
Object	————————

Temperature 25°C
Testing Circuitry Figure A

1.Graph

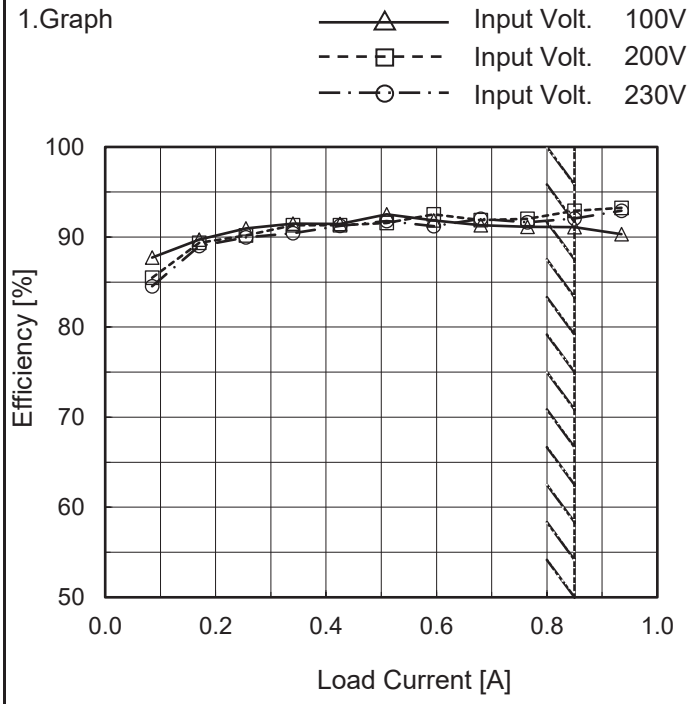

Note: Slanted line shows the range of the rated load current.

2.Values

Load Current [A]	Efficiency [%]		
	Input Volt. 100[V]	Input Volt. 200[V]	Input Volt. 230[V]
0.000	-	-	-
0.085	87.7	85.5	84.5
0.170	89.7	89.4	89.0
0.255	91.0	90.2	89.9
0.340	91.5	91.3	90.4
0.425	91.5	91.3	91.2
0.510	92.5	91.6	91.8
0.595	91.8	92.5	91.2
0.680	91.3	91.9	92.0
0.765	91.1	92.0	91.6
0.850	91.1	92.9	92.1
0.935	90.3	93.2	92.9

COSEL

Model	TECS20F-24
Item	Power Factor (by Load Current)
Object	————————

Temperature 25°C
Testing Circuitry Figure A

1.Graph

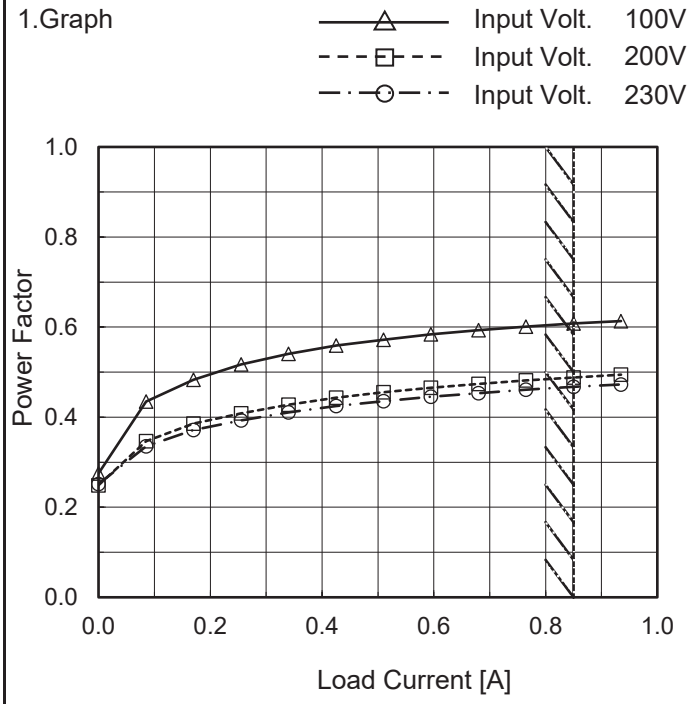

Note: Slanted line shows the range of the rated load current.

2.Values

Load Current [A]	Power Factor		
	Input Volt. 100[V]	Input Volt. 200[V]	Input Volt. 230[V]
0.000	0.275	0.249	0.252
0.085	0.435	0.347	0.335
0.170	0.483	0.385	0.371
0.255	0.517	0.408	0.392
0.340	0.541	0.428	0.411
0.425	0.559	0.443	0.425
0.510	0.572	0.455	0.436
0.595	0.584	0.465	0.445
0.680	0.593	0.474	0.454
0.765	0.601	0.482	0.461
0.850	0.608	0.488	0.467
0.935	0.613	0.494	0.473

COSEL

Model	TECS20F-24	
Item	Inrush Current	Temperature 25°C Testing Circuitry Figure A
Object	————————	

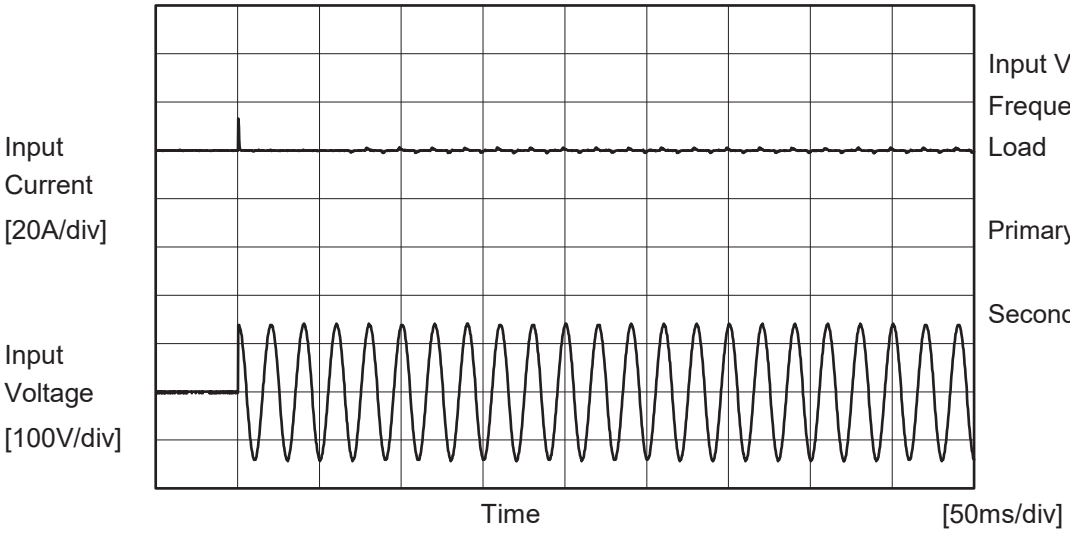

Input Voltage 100 V
Frequency 50 Hz
Load 100 %

Primary inrush current :
13.2 A
Secondary inrush current :
1.2 A

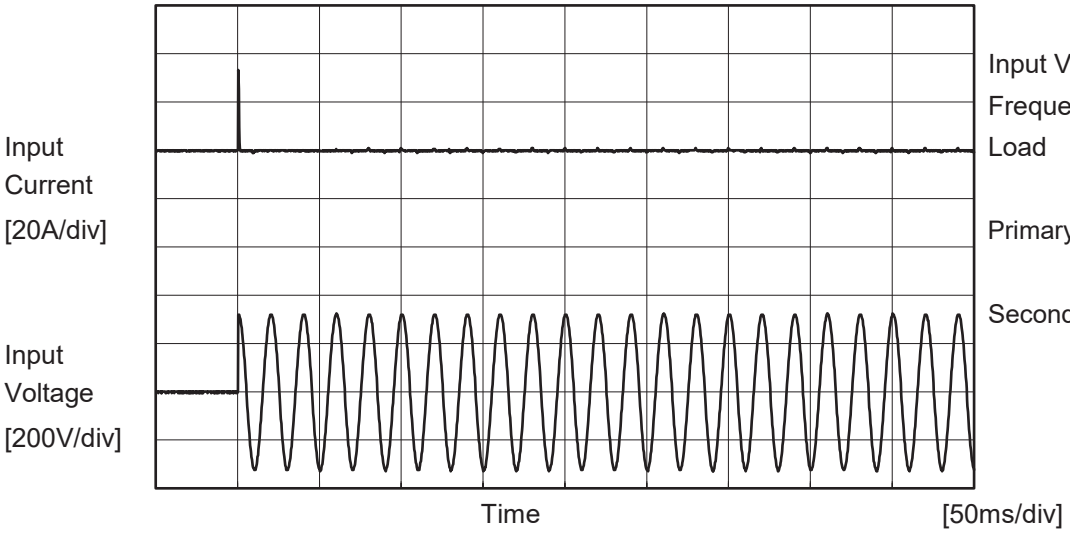

Input Voltage 230 V
Frequency 50 Hz
Load 100 %

Primary inrush current :
33.3 A
Secondary inrush current :
1.1 A

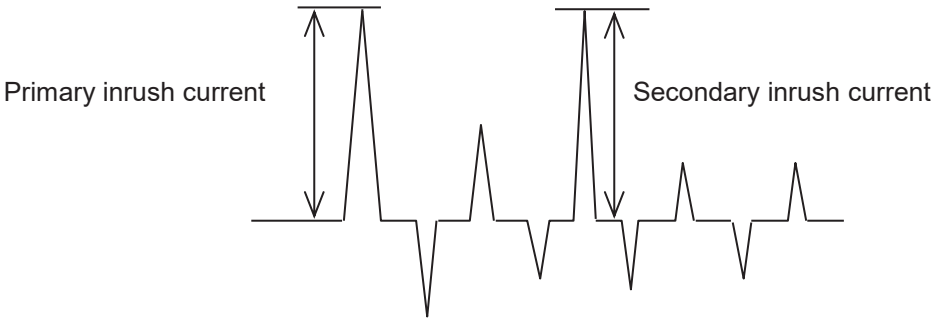

COSEL

Model	TECS20F-24	
Item	Leakage Current	Temperature 25°C Testing Circuitry Figure C
Object	――――――――――	

1.Results

[μA]

Standards	Testing Circuitry	Measuring Method	Input Volt.			Note
			100 [V]	230 [V]	264 [V]	
DEN-AN	Figure C-1	Both phases	23	47	54	Operation
		One of phases	28	70	81	Stand by
IEC62368-1	Figure C-2	Both phases	19	44	52	Operation
		One of phases	28	69	80	Stand by
	Figure C-3	Both phases	19	45	52	Operation
		One of phases	28	69	81	Stand by

The value for "One of phases" is the reference value only.

2.Condition

Leakage current value is concluded after measuring both phases of AC input and by choosing the larger one.

COSEL

Model	TECS20F-24
Item	Line Regulation
Object	+24V0.85A

Temperature 25°C
Testing Circuitry Figure A

1.Graph

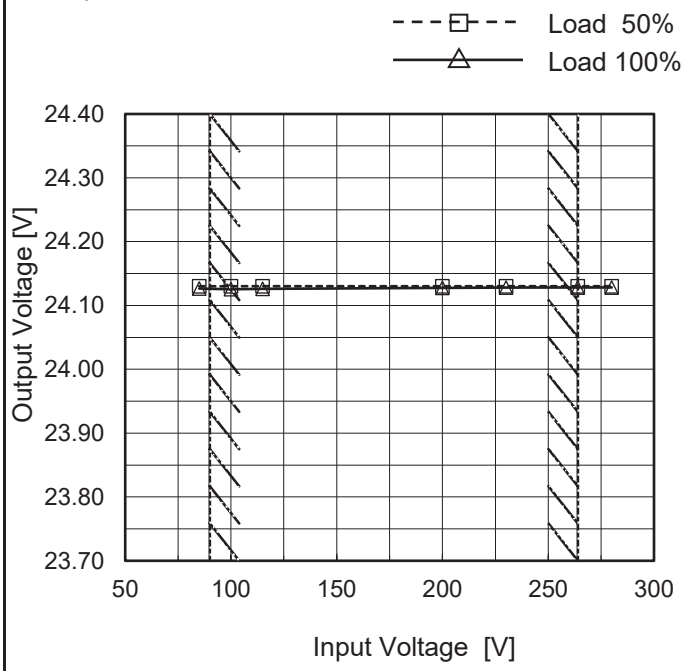

Note: Slanted line shows the range of the rated input voltage.

2.Values

Input Voltage [V]	Output Voltage [V]	
	Load 50%	Load 100%
85	24.130	24.127
100	24.130	24.125
115	24.130	24.126
200	24.130	24.128
230	24.130	24.128
264	24.130	24.128
280	24.130	24.128
--	-	-
--	-	-

COSEL

Model	TECS20F-24
Item	Load Regulation
Object	+24V0.85A

Temperature 25°C
Testing Circuitry Figure A

1.Graph

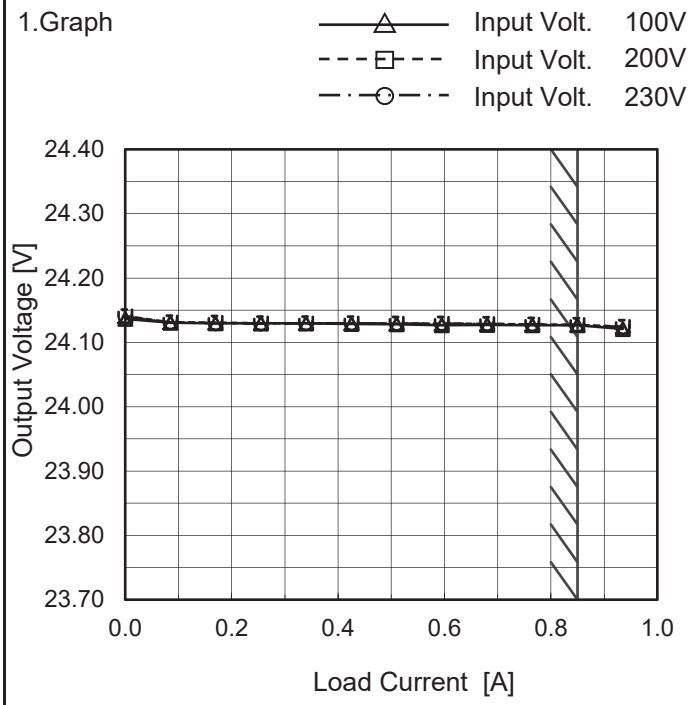

Note: Slanted line shows the range of the rated load current.

2.Values

Load Current [A]	Output Voltage [V]		
	Input Volt. 100[V]	Input Volt. 200[V]	Input Volt. 230[V]
0.000	24.137	24.141	24.140
0.085	24.131	24.131	24.131
0.170	24.129	24.131	24.130
0.255	24.129	24.130	24.129
0.340	24.129	24.130	24.130
0.425	24.129	24.130	24.129
0.510	24.128	24.129	24.129
0.595	24.127	24.129	24.129
0.680	24.127	24.129	24.129
0.765	24.127	24.128	24.128
0.850	24.127	24.127	24.127
0.935	24.121	24.124	24.124

Item	Ripple-Noise
Object	+24V0.85A

Temperature 25°C
Testing Circuitry Figure B

1.Graph

Input Voltage 230V
Load 100%

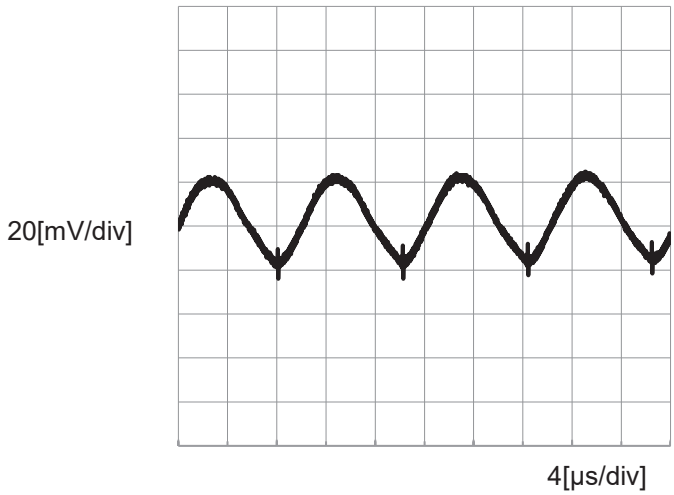

BC-12089

COSEL

Model	TECS20F-24	
Item	Dynamic Load Response	Temperature 25°C Testing Circuitry Figure A
Object	+24V0.85A	

Input Volt. 230 V
Cycle 1000 ms

Response. t1=t2=50µs. Typ

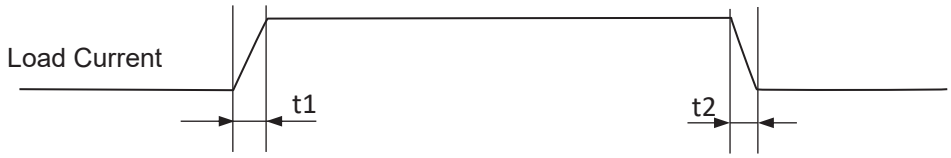

Load 0%(0A) ←→
Load 100%(0.85A)

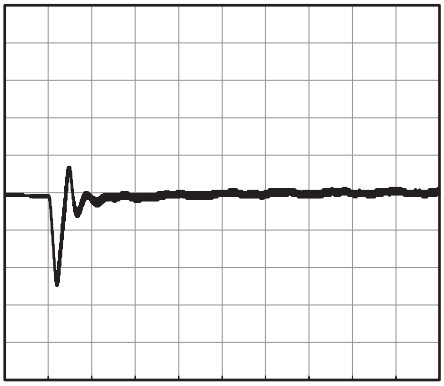

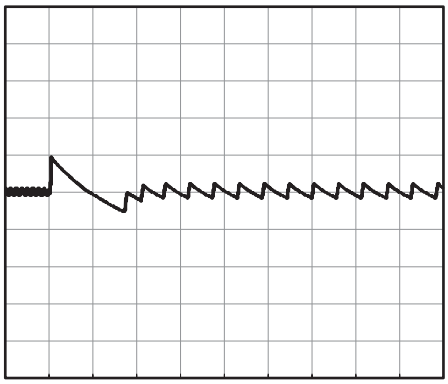

200[mV/div]

1[ms/div]

10[ms/div]

Load 50%(0.425A) ←→
Load 100%(0.85A)

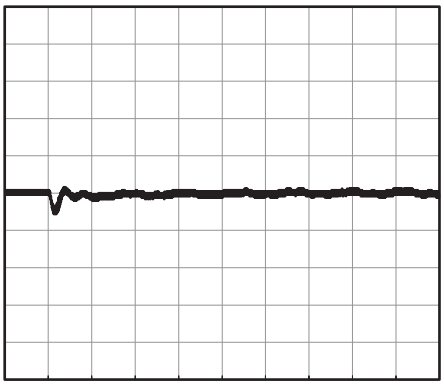

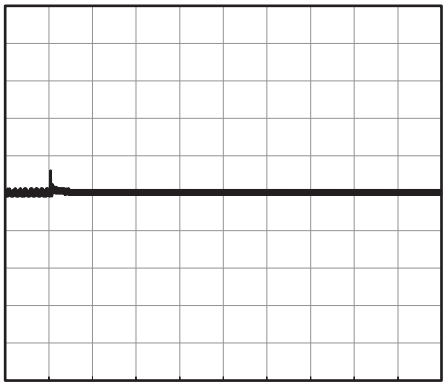

200[mV/div]

1[ms/div]

10[ms/div]

Load 0%(0A) ←→
Load 50%(0.425A)

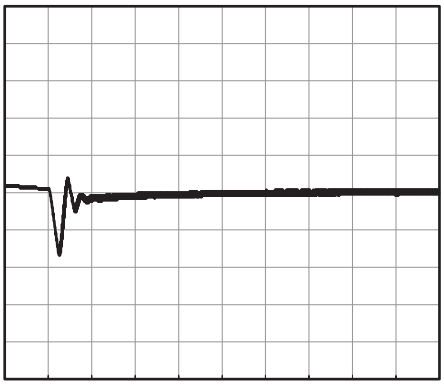

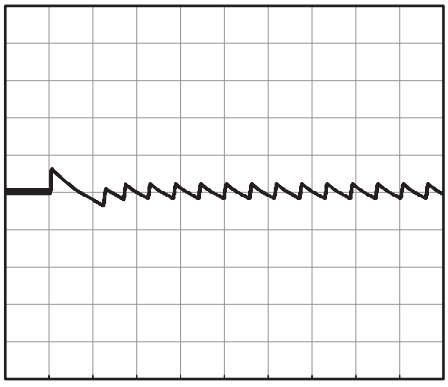

200[mV/div]

1[ms/div]

10[ms/div]

COSEL

Model	TECS20F-24	
Item	Rise and Fall Time	Temperature 25°C Testing Circuitry Figure A
Object	+24V0.85A	

1.Graph

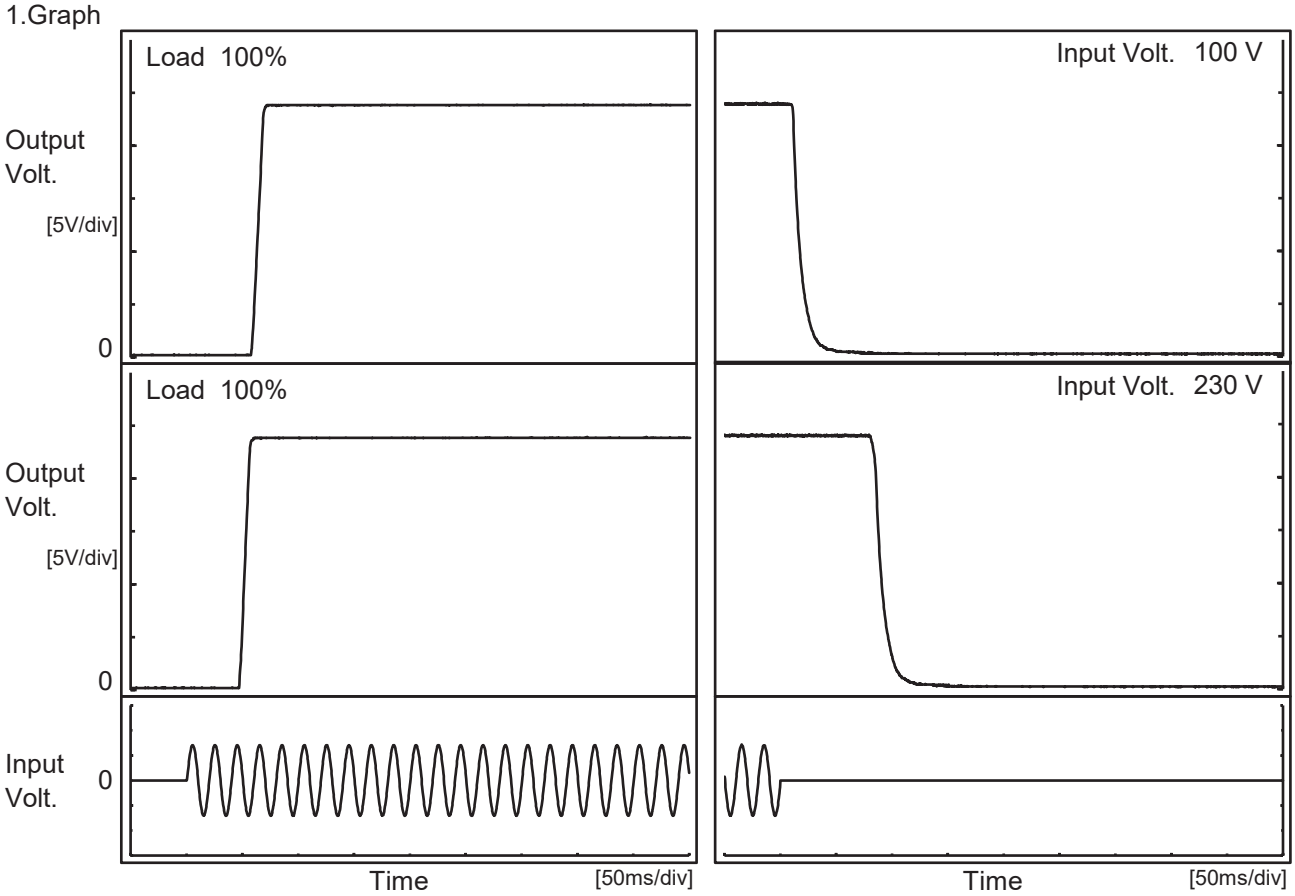

2.Values

[ms]

Input Volt. \ Time	Td	Tr	Ts	Th	Tf
100V	59.3	9.0	68.3	12.0	16.3
230V	48.3	8.0	56.3	84.5	17.0

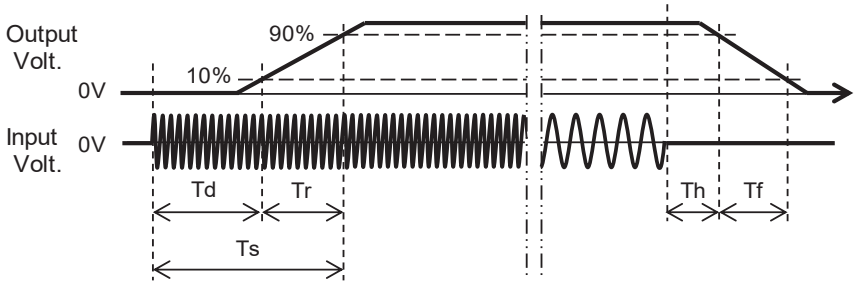

BC-12089

COSEL

Model	TECS20F-24
Item	Hold-Up Time
Object	+24V0.85A

Temperature 25°C
Testing Circuitry Figure A

1.Graph

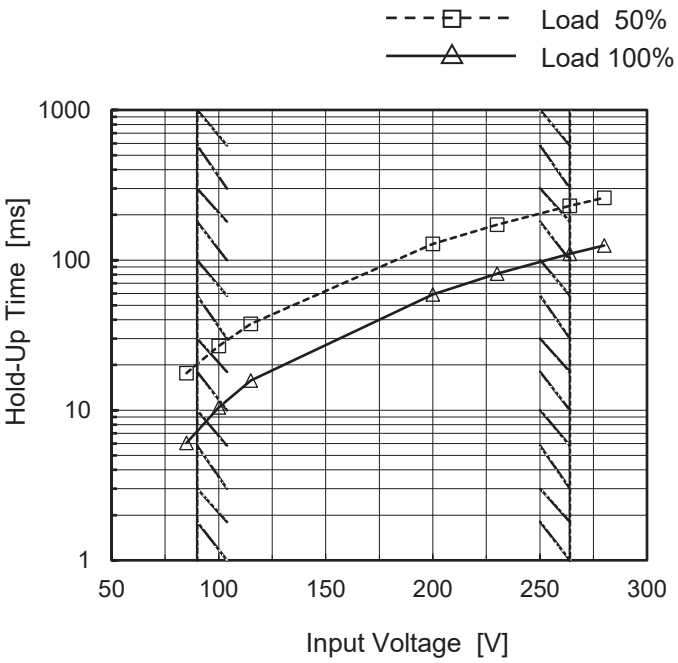

This duration covers from Shut-off of input voltage to the moment when output voltage descends to the rated range of voltage accuracy.
Note: Slanted line shows the range of the rated input voltage.

2.Values

Input Voltage [V]	Hold-Up Time [ms]	
	Load 50%	Load 100%
85	18	6
100	27	10
115	38	16
200	128	59
230	172	81
264	230	110
280	260	125
--	-	-
--	-	-

BC-12089

COSEL

Model	TECS20F-24
Item	Instantaneous Interruption Compensation
Object	+24V0.85A

Temperature 25°C
Testing Circuitry Figure A

1.Graph

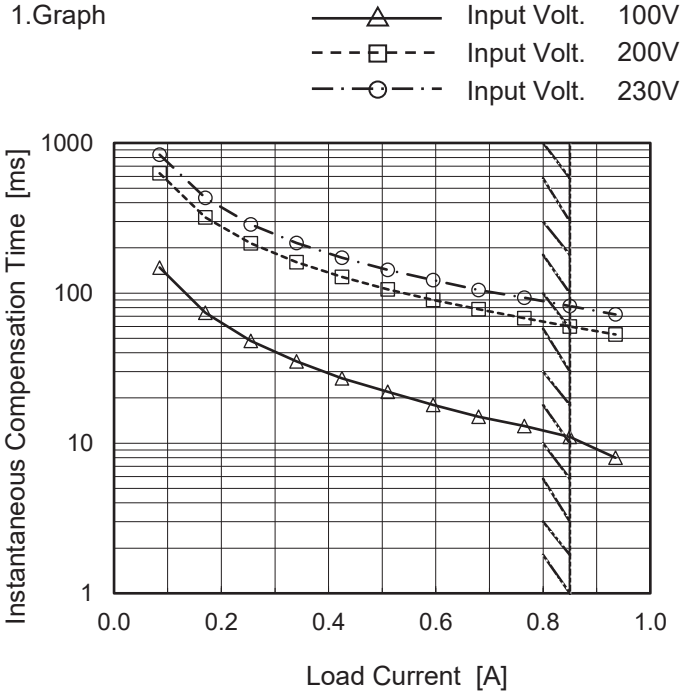

Note: Slanted line shows the range of the rated load current.

2.Values

Load Current [A]	Time [ms]		
	Input Volt. 100[V]	Input Volt. 200[V]	Input Volt. 230[V]
0.000	-	-	-
0.085	148	628	835
0.170	74	320	430
0.255	48	215	287
0.340	35	161	216
0.425	27	128	172
0.510	22	106	143
0.595	18	90	122
0.680	15	78	105
0.765	13	68	93
0.850	11	60	82
0.935	8	53	72

BC-12089

COSEL

Model	TECS20F-24
Item	Overcurrent Protection
Object	+24V0.85A

Temperature 25°C
Testing Circuitry Figure A

1.Graph

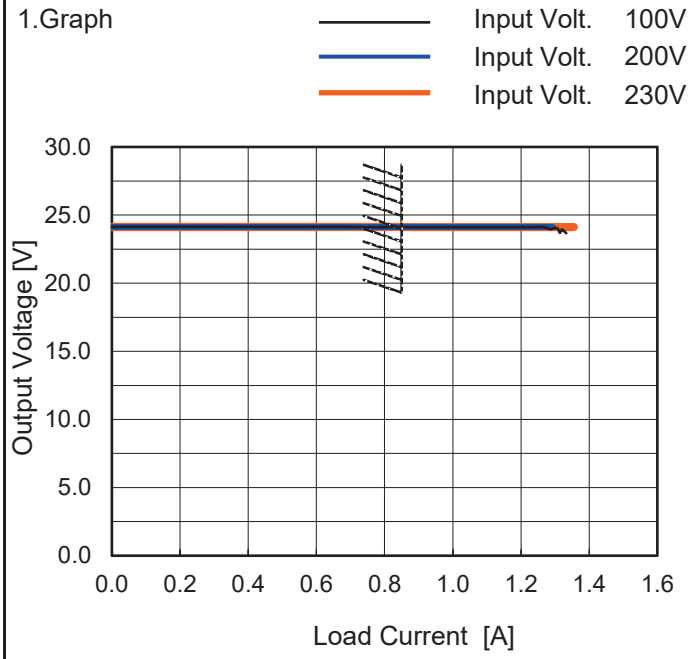

Note: Slanted line shows the range of the rated load current.

Overcurrent protection is Hiccup mode.

2.Values

Output Voltage [V]	Load Current [A]		
	Input Volt. 100[V]	Input Volt. 200[V]	Input Volt. 230[V]
24.0	1.33	1.29	1.36
22.8	-	-	-
21.6	-	-	-
19.2	-	-	-
16.8	-	-	-
14.4	-	-	-
12.0	-	-	-
9.6	-	-	-
7.2	-	-	-
4.8	-	-	-
2.4	-	-	-
0.0	-	-	-

COSEL

Model	TECS20F-24
Item	Ambient Temperature Drift
Object	+24V0.85A

Testing Circuitry Figure A

1.Values

Load 100%

Ambient Temperature[℃]	Output Voltage [V]		
	Input Volt. 100V	Input Volt. 200V	Input Volt. 230V
-20	24.061	24.062	24.062
25	24.105	24.108	24.108
60	24.112	24.115	24.116

Item	Minimum Input Voltage for Regulated Output Voltage
Object	+24V0.85A

Testing Circuitry Figure A

1.Values

Ambient Temperature[℃]	Input Voltage [V]	
	Load 50%	Load 100%
-20	38	58
25	38	55
60	37	55

Item	Overvoltage Protection
Object	+24V0.85A

Testing Circuitry Figure A

1.Values

Load 0%

Ambient Temperature[℃]	Operating Point [V]	
	Input Volt. 100V	Input Volt. 230V
-20	30.60	30.65
25	31.33	31.33
60	32.35	32.20

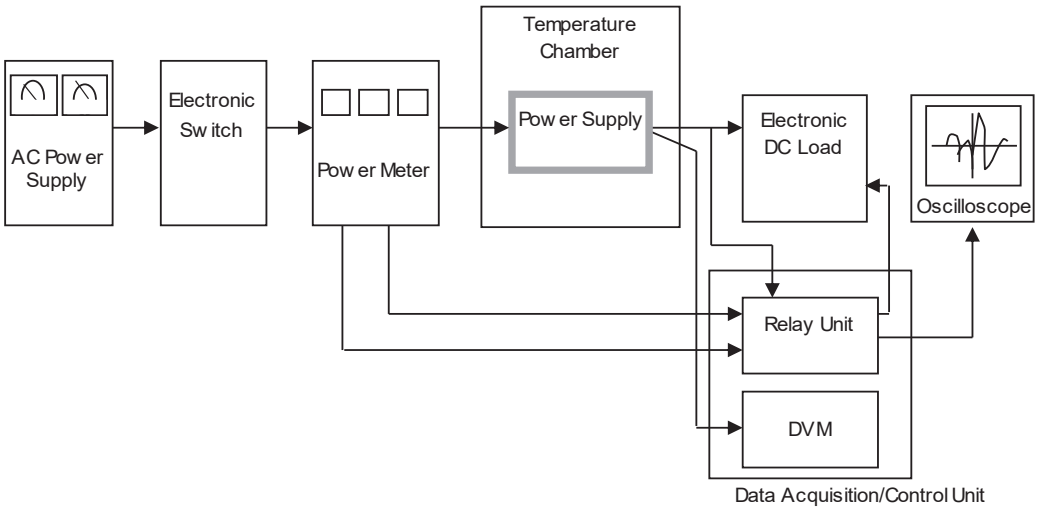

Figure A

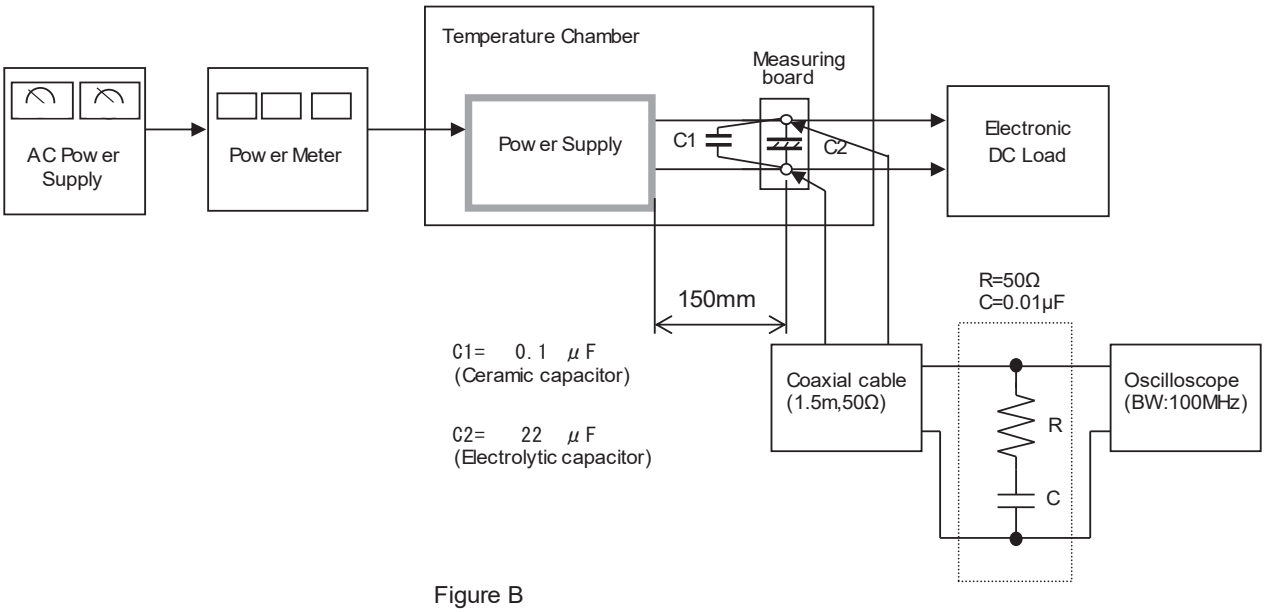

Figure B

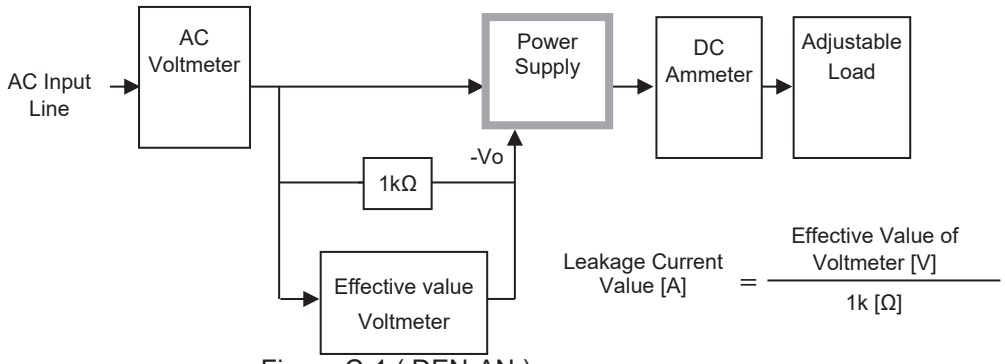

Figure C-1 (DEN-AN)

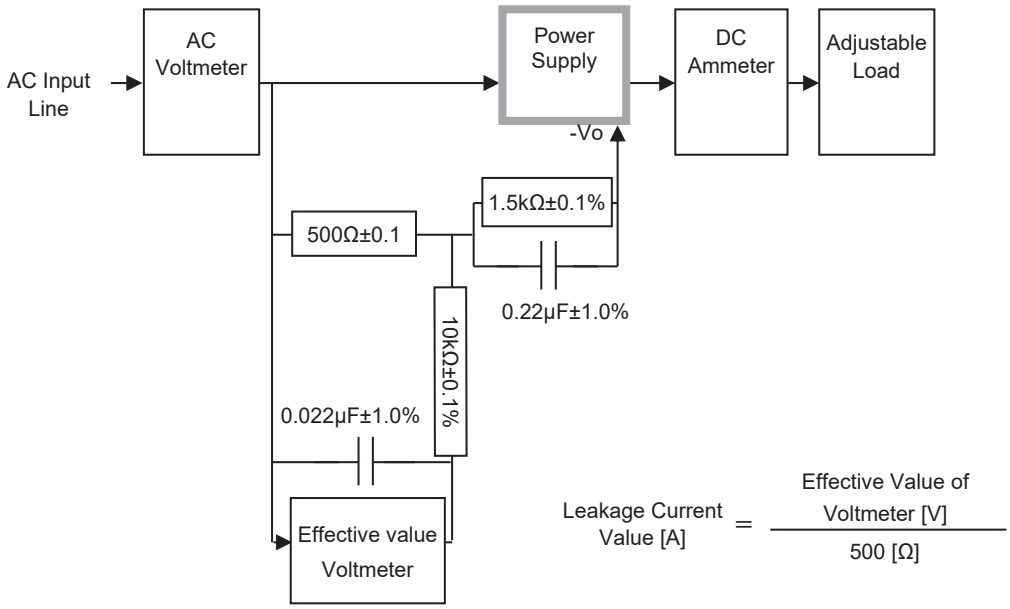

Figure C-2 (IEC62368-1 refer to IEC60990 Fig.4)

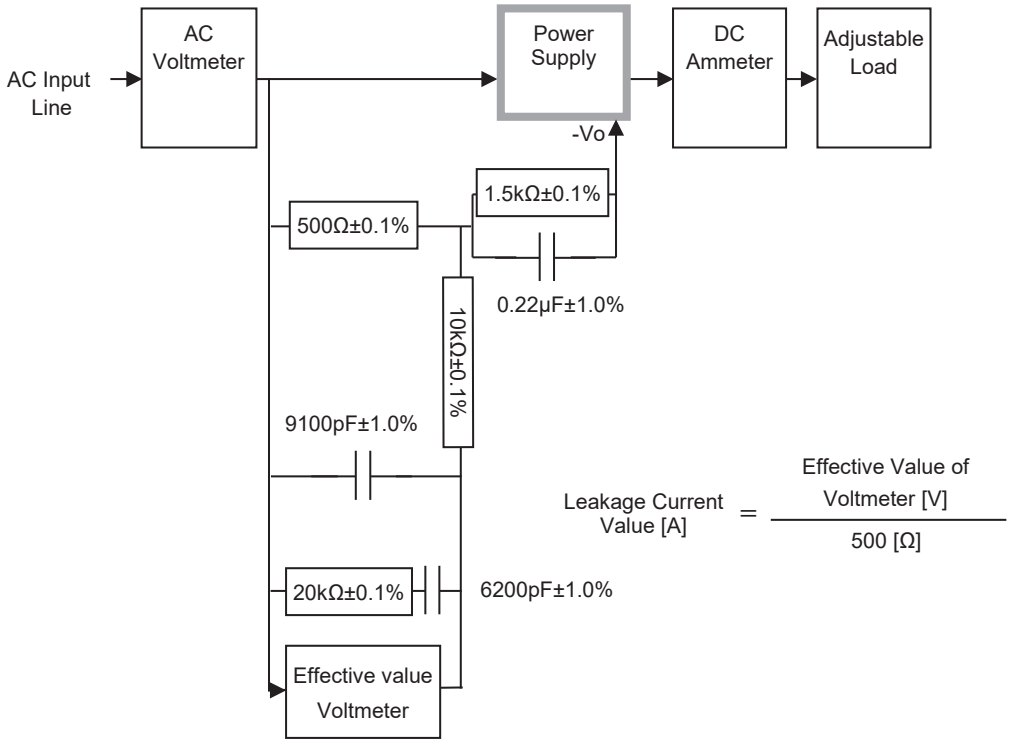

Figure C-3 (IEC62368-1 refer to IEC60990 Fig.5)