For Reference

TEST DATA OF TECS45F-12

Regulated DC Power Supply
October.3. 2023

Approved by : Satoshi Uetani
Design Manager

Prepared by : Riku Nishimura
Design Engineer

COSEL CO.,LTD.

COSEL

CONTENTS

1.Input Current (by Load Current) · 1
2.Efficiency (by Load Current) · 2
3.Power Factor (by Load Current) · 3
4.Inrush Current · 4
5.Leakage Current · 5
6.Line Regulation · 6
7.Load Regulation · 7
8.Ripple-Noise · 7
9.Dynamic Load Response · 8
10.Rise and Fall Time · 9
11.Hold-Up Time · 10
12.Instantaneous Interruption Compensation · · · · · · · · · · · · · · · · · 11
13.Overcurrent Protection · 12
14.Ambient Temperature Drift · 13
15.Minimum Input Voltage for Regulated Output Voltage · · · · · · · · · · 13
16.Overvoltage Protection · 13
17.Figure of Testing Circuitry · 14
(Final Page 15)

COSEL

Model	TECS45F-12
Item	Input Current (by Load Current)
Object	————————

Temperature 25°C
Testing Circuitry Figure A

1.Graph

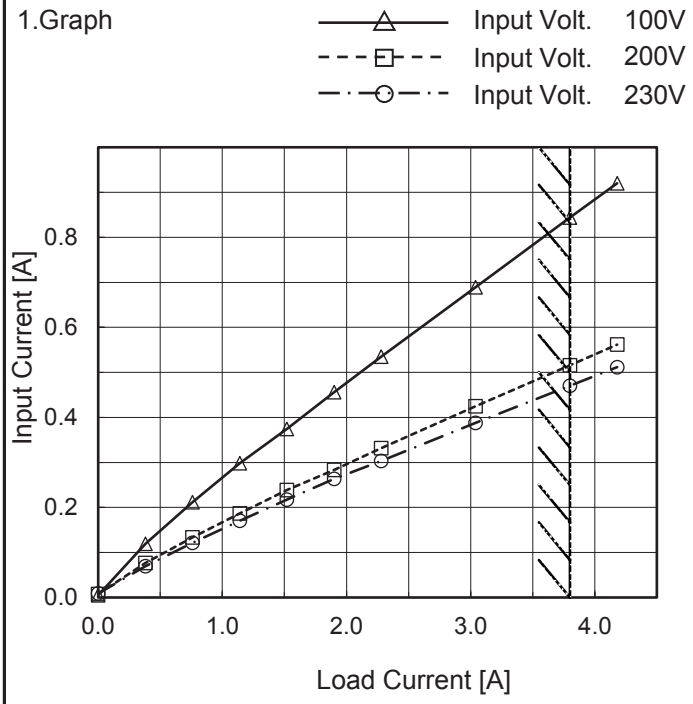

Note: Slanted line shows the range of the rated load current.

2.Values

Load Current [A]	Input Current [A]		
	Input Volt. 100[V]	Input Volt. 200[V]	Input Volt. 230[V]
0.00	0.005	0.008	0.009
0.38	0.120	0.077	0.070
0.76	0.211	0.133	0.121
1.14	0.298	0.187	0.171
1.52	0.375	0.238	0.218
1.90	0.456	0.284	0.263
2.28	0.535	0.332	0.303
3.04	0.689	0.425	0.388
3.80	0.844	0.516	0.471
4.18	0.920	0.562	0.512
--	-	-	-

BC-11945

COSEL

Model	TECS45F-12
Item	Efficiency (by Load Current)
Object	――――――

Temperature 25°C
Testing Circuitry Figure A

1.Graph

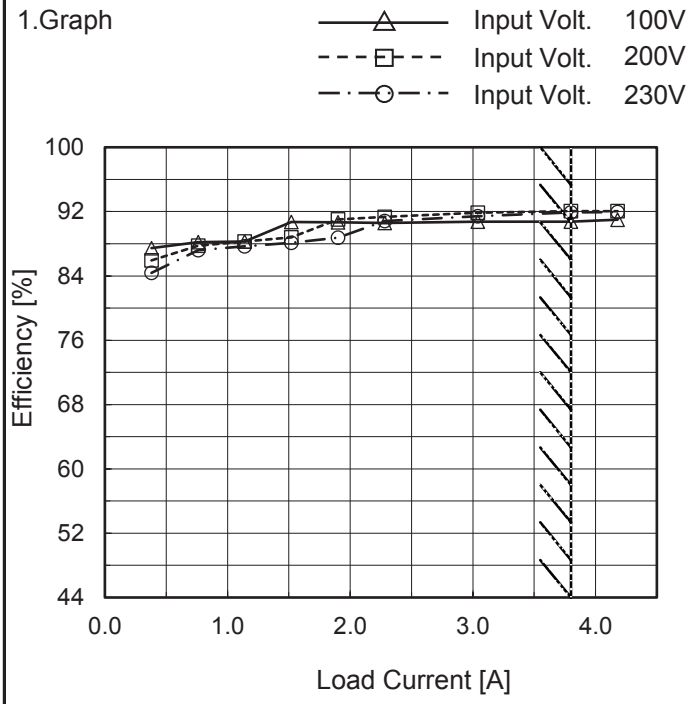

Note: Slanted line shows the range of the rated load current.

2.Values

Load Current [A]	Efficiency [%]		
	Input Volt. 100[V]	Input Volt. 200[V]	Input Volt. 230[V]
0.00	-	-	-
0.38	87.5	85.9	84.4
0.76	88.2	87.7	87.2
1.14	88.3	88.3	87.7
1.52	90.7	88.8	88.1
1.90	90.7	91.0	88.7
2.28	90.6	91.3	90.8
3.04	90.8	91.9	91.4
3.80	90.8	92.0	91.9
4.18	91.0	92.0	91.9
--	-	-	-

COSEL

Model	TECS45F-12
Item	Power Factor (by Load Current)
Object	————————

Temperature 25°C
Testing Circuitry Figure A

1.Graph

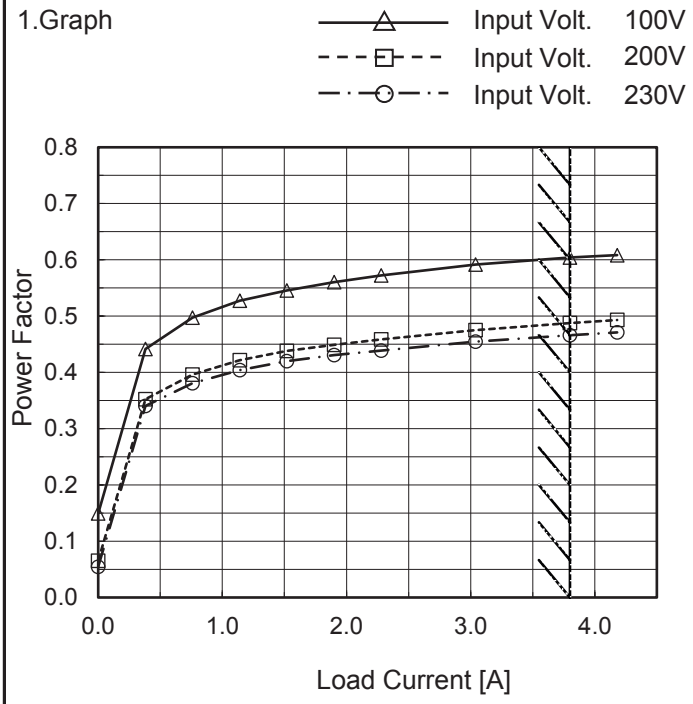

Note: Slanted line shows the range of the rated load current.

2.Values

Load Current [A]	Power Factor		
	Input Volt. 100[V]	Input Volt. 200[V]	Input Volt. 230[V]
0.00	0.149	0.065	0.055
0.38	0.442	0.352	0.340
0.76	0.497	0.396	0.380
1.14	0.527	0.422	0.404
1.52	0.545	0.438	0.420
1.90	0.560	0.449	0.431
2.28	0.572	0.458	0.439
3.04	0.591	0.475	0.455
3.80	0.604	0.488	0.466
4.18	0.608	0.493	0.471
--	-	-	-

BC-11945

COSEL

Model	TECS45F-12	
Item	Inrush Current	Temperature 25°C Testing Circuitry Figure A
Object	————————	

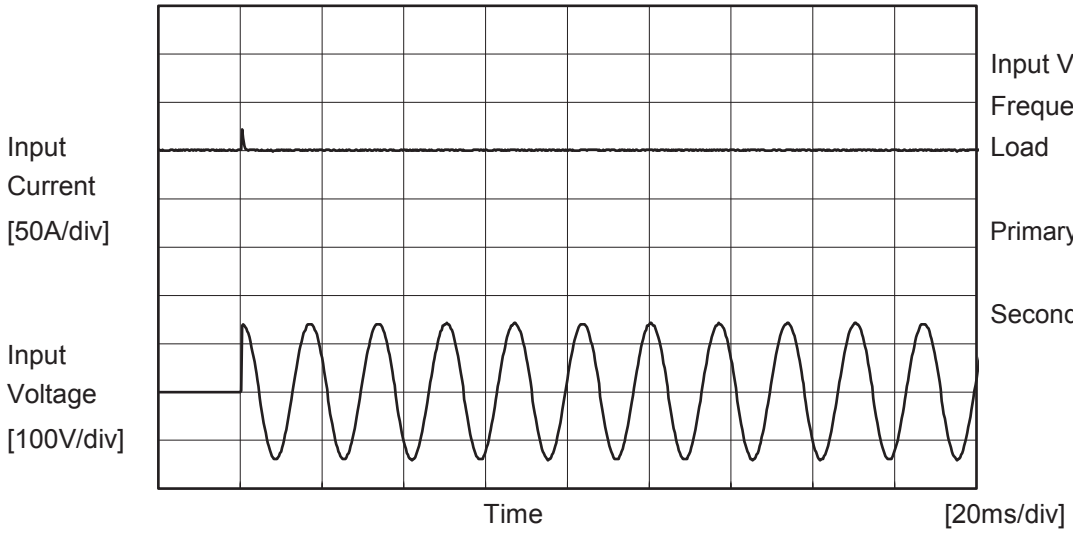

Input Voltage 100 V
Frequency 60 Hz
Load 100 %

Primary inrush current : 21.9 A
Secondary inrush current : 2.9 A

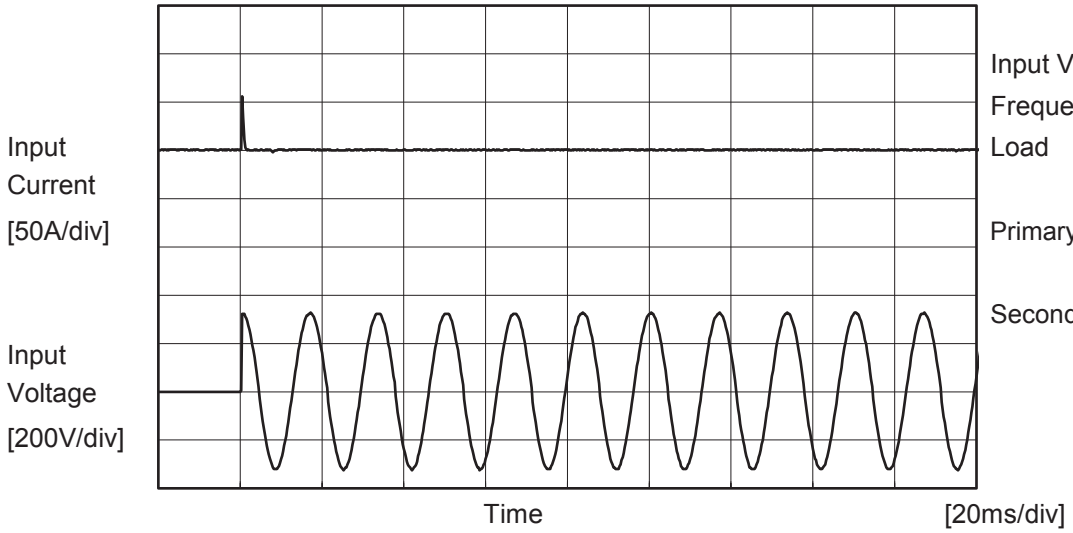

Input Voltage 230 V
Frequency 60 Hz
Load 100 %

Primary inrush current : 55.9 A
Secondary inrush current : 2.1 A

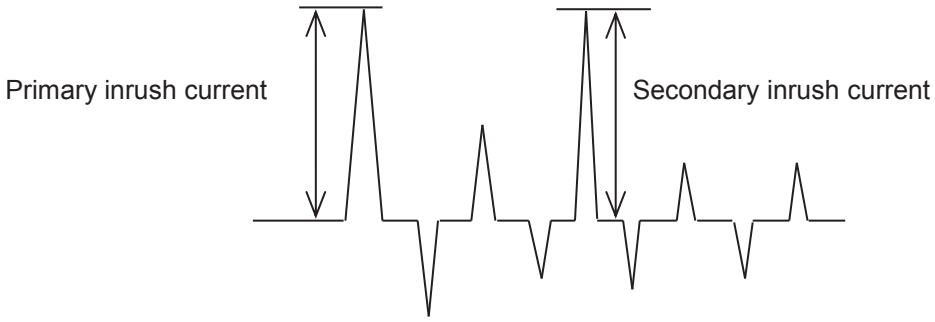

COSEL

Model	TECS45F-12	Temperature 25°C
Item	Leakage Current	Testing Circuitry Figure C
Object	――――――――――――	

1.Results

[mA]

Standards	Testing Circuitry	Measuring Method	Input Volt.			Note
			100 [V]	230 [V]	264 [V]	
DEN-AN	Figure C-1	Both phases	0.04	0.08	0.09	Operation
		One of phases	0.05	0.12	0.14	Stand by
IEC62368-1	Figure C-2	Both phases	0.03	0.08	0.09	Operation
		One of phases	0.05	0.12	0.13	Stand by
	Figure C-3	Both phases	0.03	0.07	0.08	Operation
		One of phases	0.05	0.11	0.13	Stand by

The value for "One of phases" is the reference value only.

2.Condition

Leakage current value is concluded after measuring both phases of AC input and by choosing the larger one.

COSEL

Model	TECS45F-12
Item	Line Regulation
Object	+12V3.8A

Temperature 25°C
Testing Circuitry Figure A

1.Graph

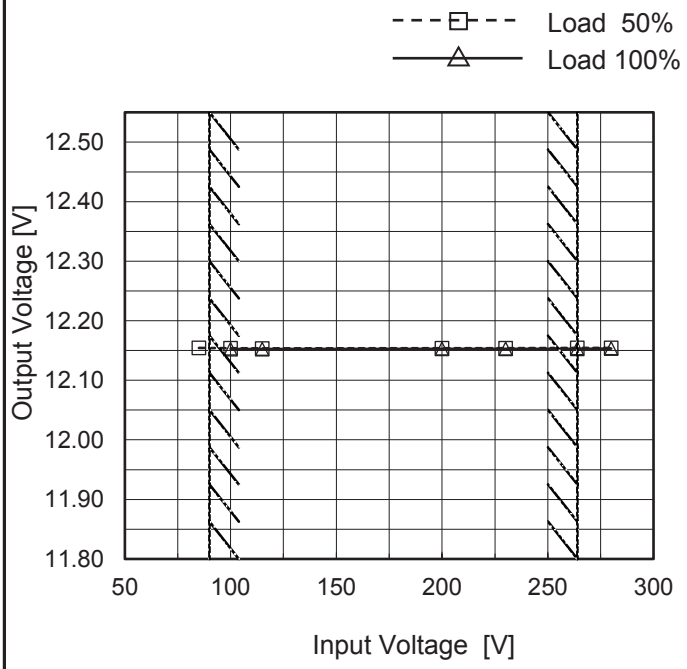

Note: Slanted line shows the range of the rated input voltage.

2.Values

Input Voltage [V]	Output Voltage [V]	
	Load 50%	Load 100%
85	12.154	-
100	12.154	12.153
115	12.154	12.153
200	12.154	12.153
230	12.154	12.153
264	12.154	12.153
280	12.154	12.153
--	-	-
--	-	-

COSEL

Model	TECS45F-12
Item	Load Regulation
Object	+12V3.8A

Temperature 25°C
Testing Circuitry Figure A

1.Graph

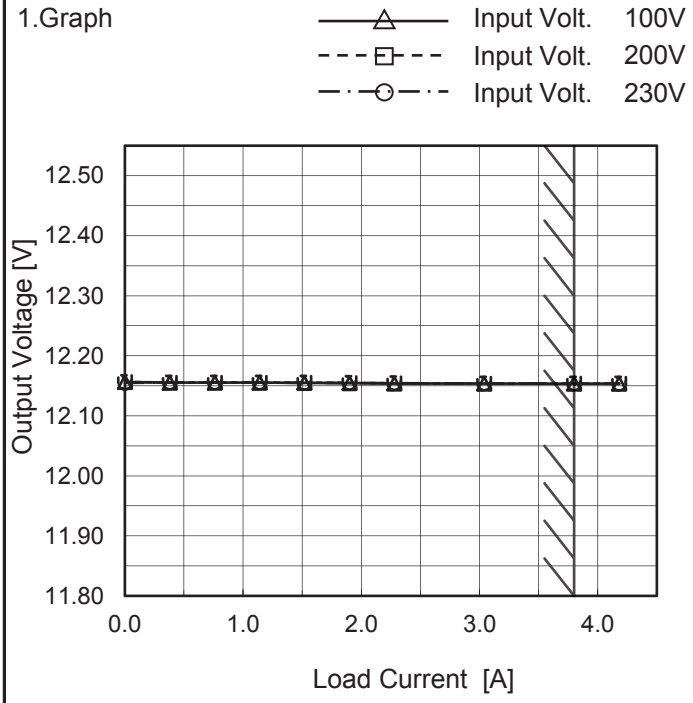

Note: Slanted line shows the range of the rated load current.

2.Values

Load Current [A]	Output Voltage [V]		
	Input Volt. 100[V]	Input Volt. 200[V]	Input Volt. 230[V]
0.00	12.156	12.156	12.155
0.38	12.156	12.156	12.156
0.76	12.155	12.155	12.155
1.14	12.155	12.155	12.155
1.52	12.155	12.155	12.155
1.90	12.154	12.155	12.155
2.28	12.154	12.155	12.154
3.04	12.154	12.154	12.154
3.80	12.154	12.154	12.154
4.18	12.154	12.154	12.153
--	--	--	--

Item	Ripple-Noise
Object	+12V3.8A

Temperature 25°C
Testing Circuitry Figure B

1.Graph

Input Voltage 230V
Load 100%

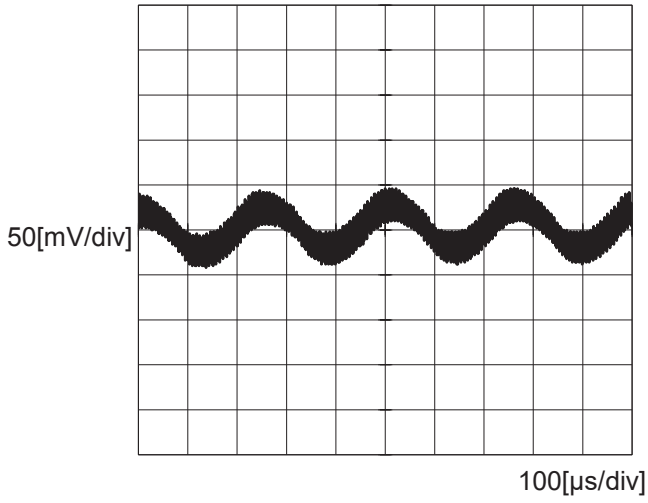

BC-11945

COSEL

Model	TECS45F-12	
Item	Dynamic Load Response	Temperature 25°C Testing Circuitry Figure A
Object	+12V3.8A	

Input Volt. 230 V
Cycle 1000 ms

Response. t1=t2=50µs. Typ

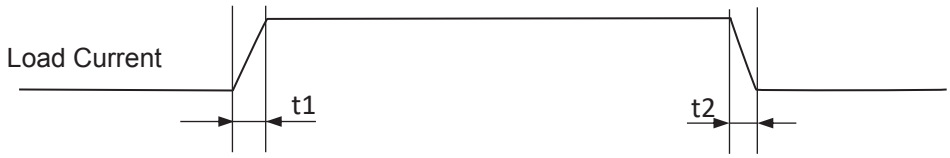

Load 0%(0A) ←→
Load 100%(3.8A)

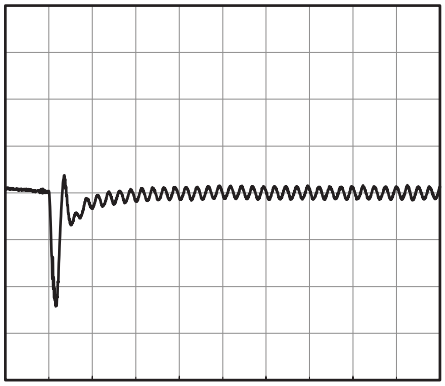

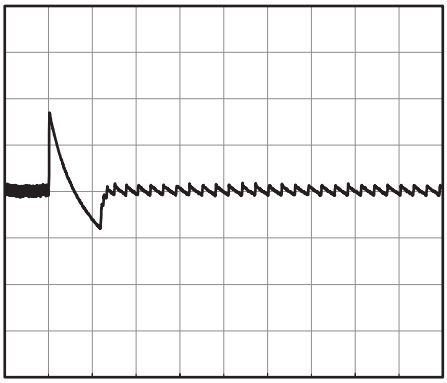

200[mV/div]

1[ms/div]

10[ms/div]

Load 50%(1.9A) ←→
Load 100%(3.8A)

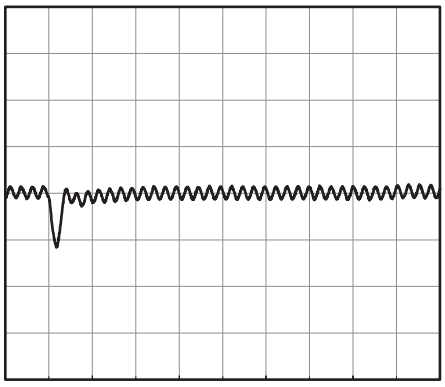

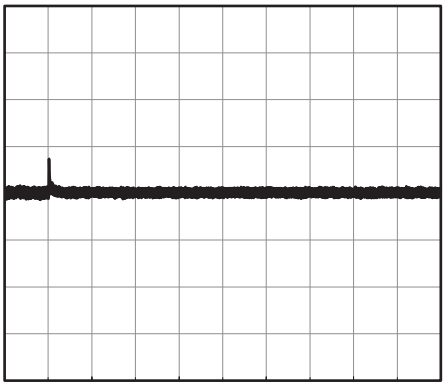

200[mV/div]

1[ms/div]

10[ms/div]

Load 0%(0A) ←→
Load 50%(1.9A)

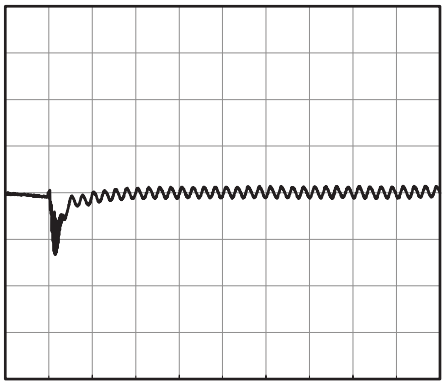

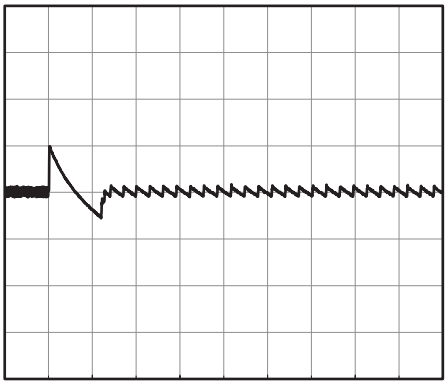

200[mV/div]

1[ms/div]

10[ms/div]

COSEL

Model	TECS45F-12	
Item	Rise and Fall Time	Temperature 25°C Testing Circuitry Figure A
Object	+12V3.8A	

1.Graph

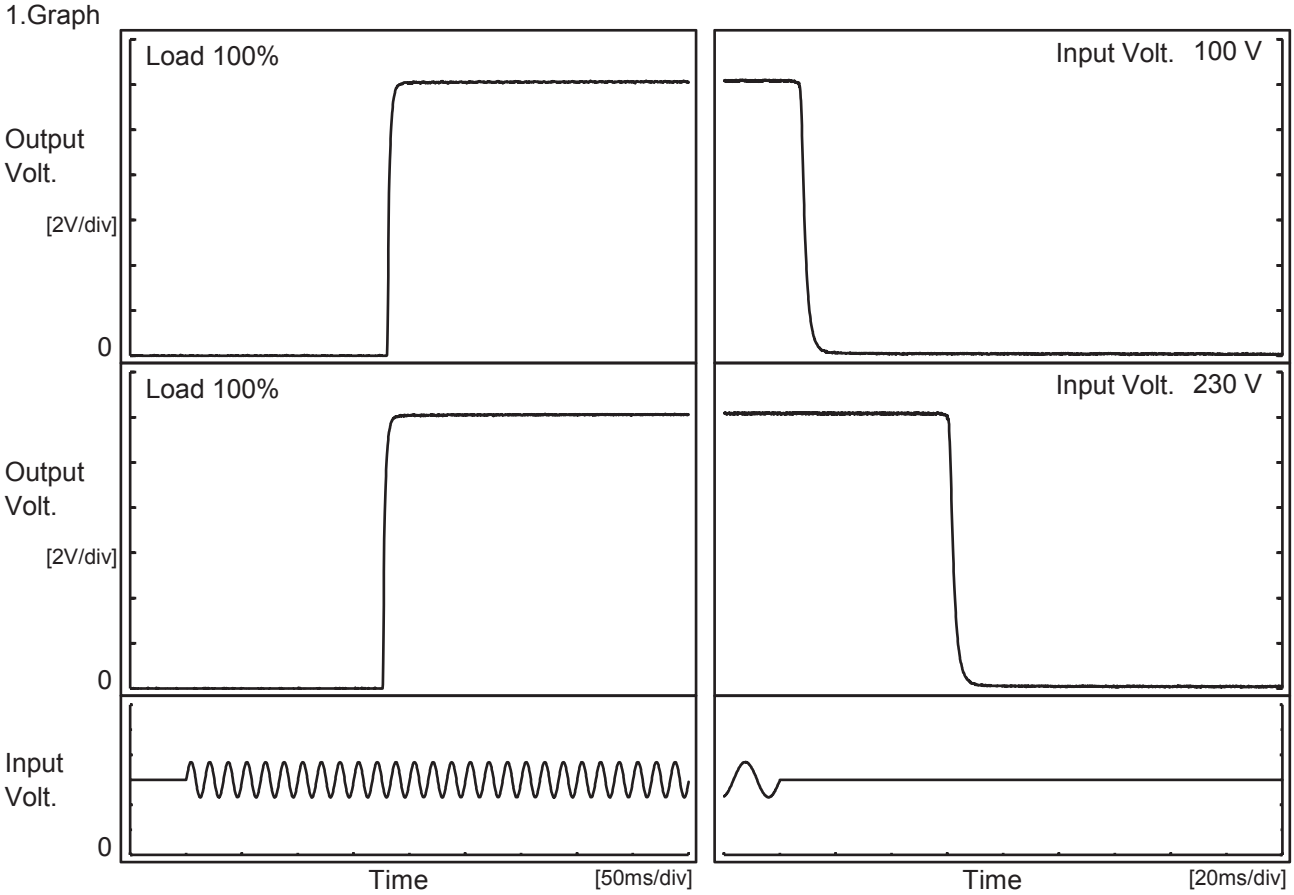

2.Values

[ms]

Input Volt. \ Time	Td	Tr	Ts	Th	Tf
100 V	180.5	4.3	184.8	7.8	4.1
230 V	176.8	4.0	180.8	61.0	3.8

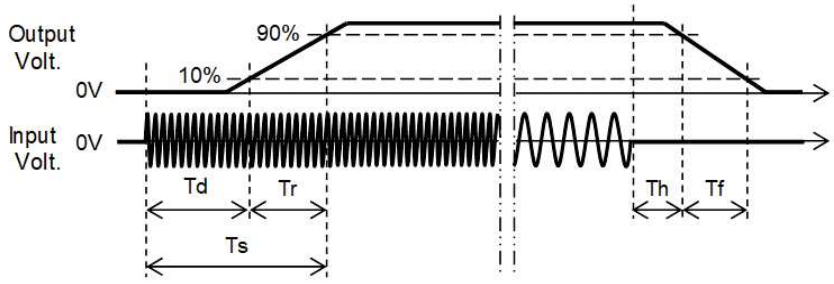

COSEL

Model	TECS45F-12
Item	Hold-Up Time
Object	+12V3.8A

Temperature 25°C
Testing Circuitry Figure A

1.Graph

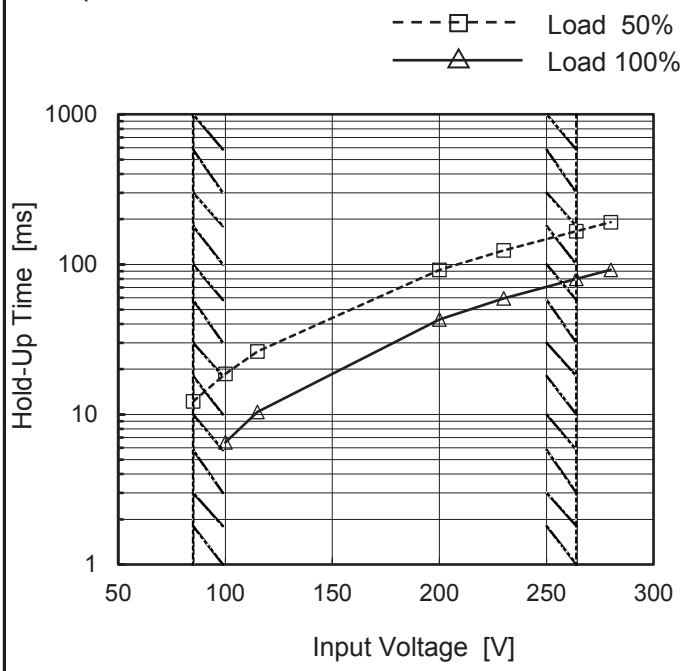

This duration covers from Shut-off of input voltage to the moment when output voltage descends to the rated range of voltage accuracy.
Note: Slanted line shows the range of the rated input voltage.

2.Values

Input Voltage [V]	Hold-Up Time [ms]	
	Load 50%	Load 100%
85	12	-
100	19	7
115	26	10
200	92	43
230	124	59
264	166	80
280	191	92
--	-	-
--	-	-

BC-11945

COSEL

Model	TECS45F-12
Item	Instantaneous Interruption Compensation
Object	+12V3.8A

Temperature 25°C
Testing Circuitry Figure A

1.Graph

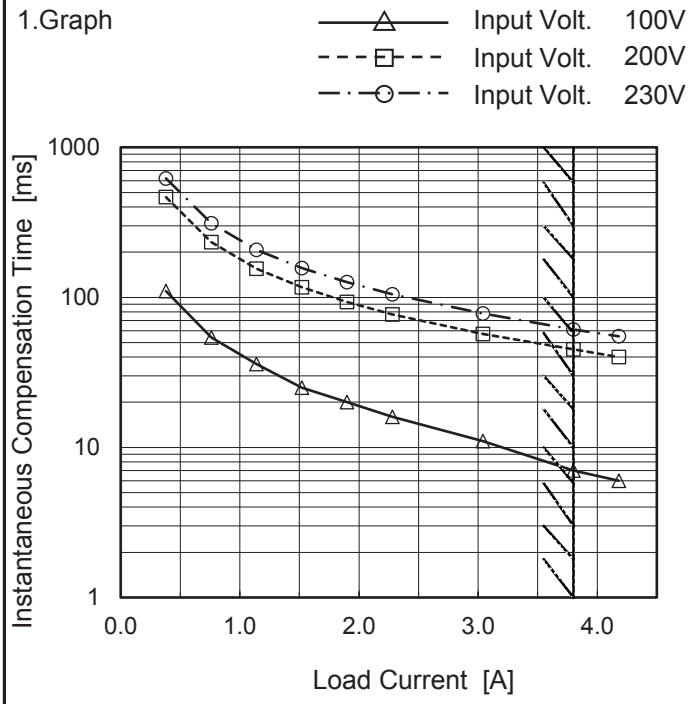

Note: Slanted line shows the range of the rated load current.

2.Values

Load Current [A]	Time [ms]		
	Input Volt. 100[V]	Input Volt. 200[V]	Input Volt. 230[V]
0.00	-	-	-
0.38	110	465	620
0.76	54	233	312
1.14	36	155	207
1.52	25	117	157
1.90	20	93	126
2.28	16	77	105
3.04	11	57	78
3.80	7	45	61
4.18	6	40	55
--	-	-	-

COSEL

Model	TECS45F-12
Item	Overcurrent Protection
Object	+12V3.8A

Temperature 25°C
Testing Circuitry Figure A

1.Graph

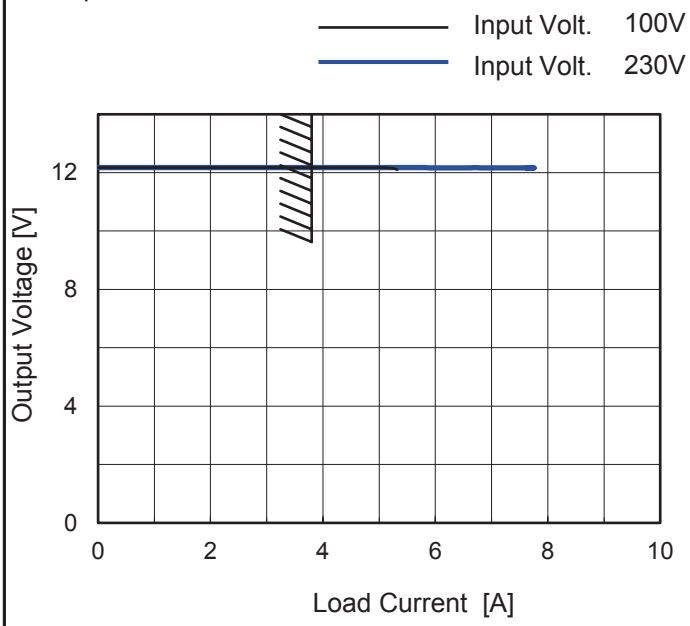

Note: Slanted line shows the range of the rated load current.

Overcurrent protection is Hiccup mode.

2.Values

Output Voltage [V]	Load Current [A]	
	Input Volt. 100[V]	Input Volt. 230[V]
12.0	5.32	7.75
11.4	-	-
10.8	-	-
9.6	-	-
8.4	-	-
7.2	-	-
6.0	-	-
4.8	-	-
3.6	-	-
2.4	-	-
1.2	-	-
0.0	-	-

COSEL

Model	TECS45F-12
Item	Ambient Temperature Drift
Object	+12V3.8A

Testing Circuitry Figure A

1.Values

Load 100%

Ambient Temperature[℃]	Output Voltage [V]		
	Input Volt. 100V	Input Volt. 200V	Input Volt. 230V
-10	12.167	12.168	12.167
25	12.160	12.161	12.161
50	12.144	12.144	12.145

Item	Minimum Input Voltage for Regulated Output Voltage
Object	+12V3.8A

Testing Circuitry Figure A

1.Values

Ambient Temperature[℃]	Input Voltage [V]	
	Load 50%	Load 100%
-10	61	62
25	62	63
50	62	62

Item	Overvoltage Protection
Object	+12V3.8A

Testing Circuitry Figure A

1.Values

Load 0%

Ambient Temperature[℃]	Operating Point [V]	
	Input Volt. 100V	Input Volt. 230V
-10	14.16	14.16
25	14.16	14.16
50	14.16	14.16

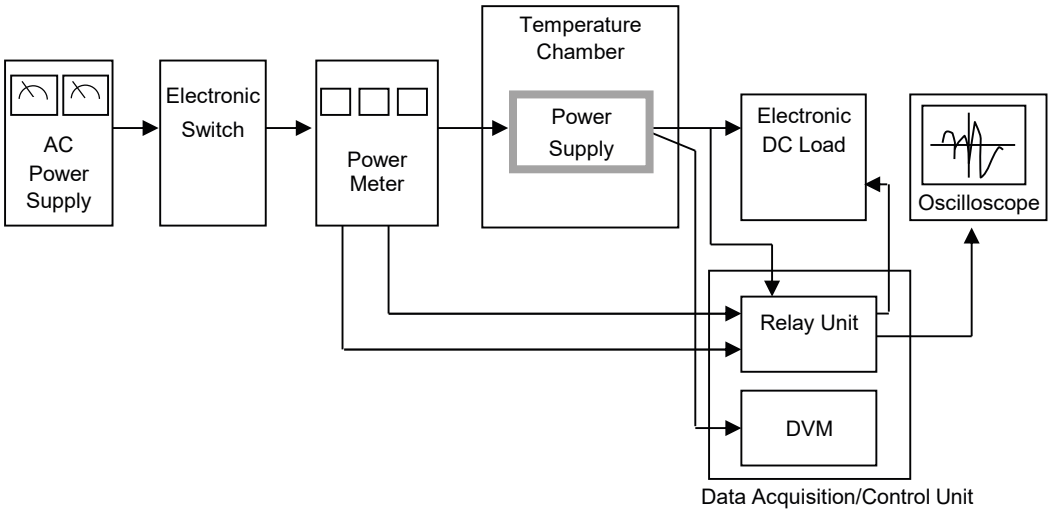

Figure A

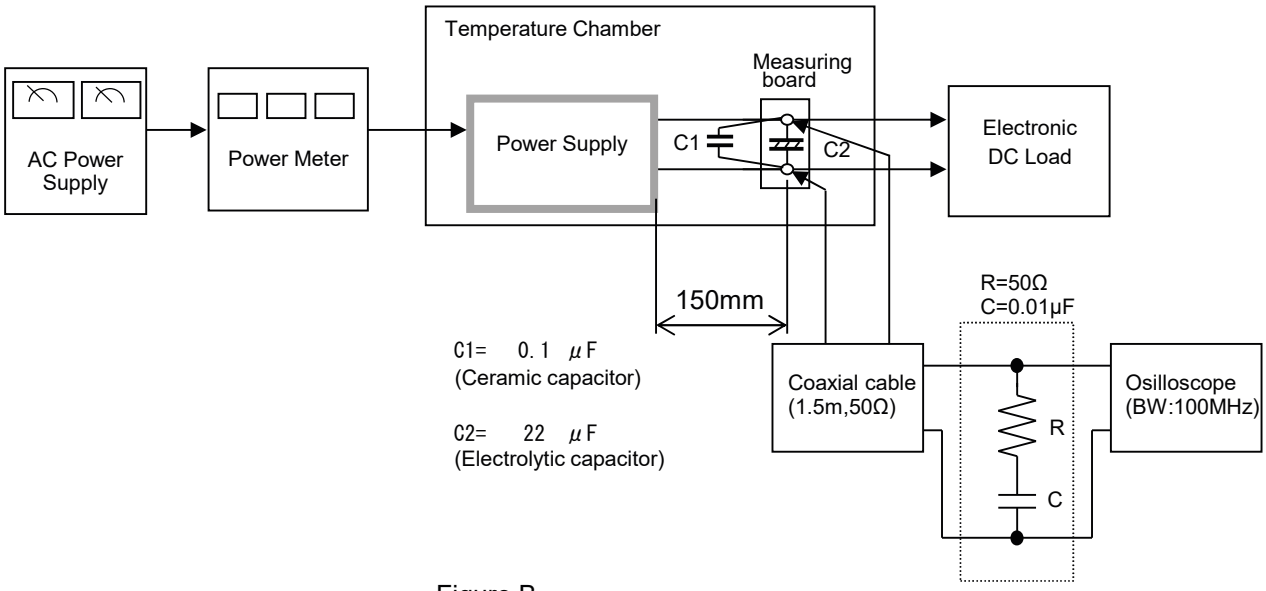

Figure B

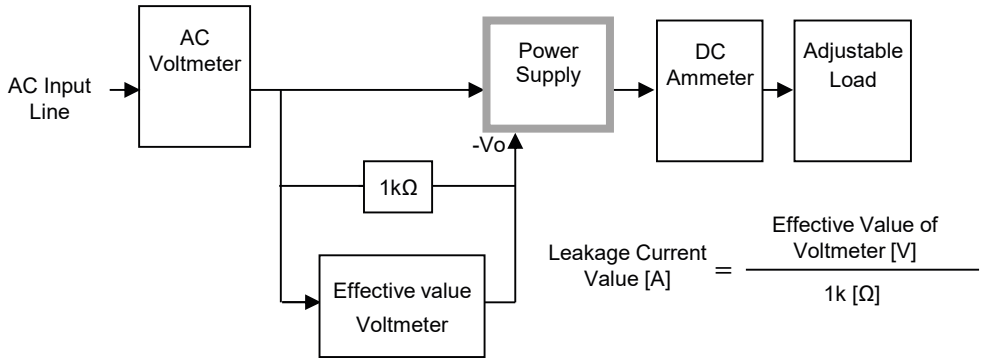

Figure C-1 (DEN-AN)

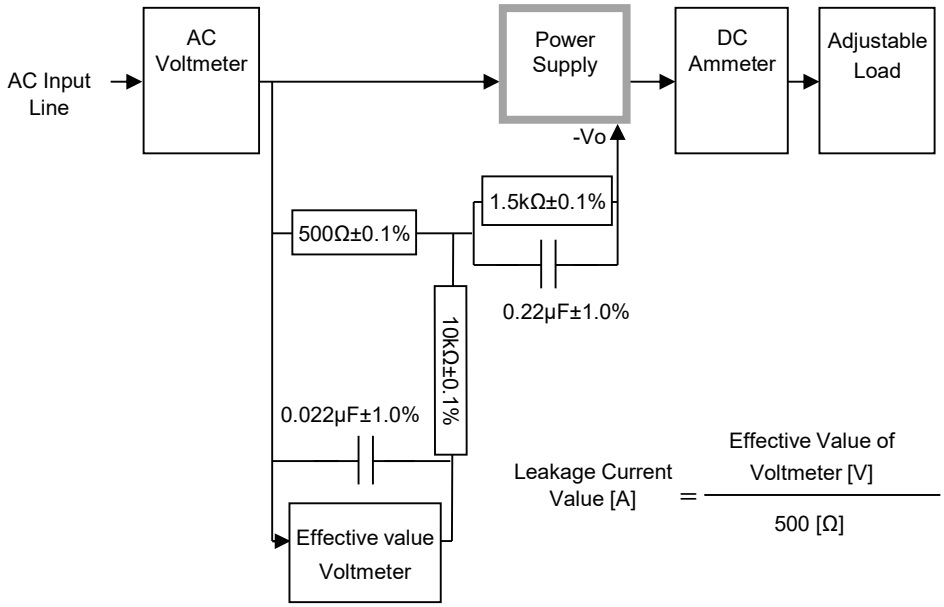

Figure C-2 (IEC62368-1 refer to IEC60990 Fig.4)

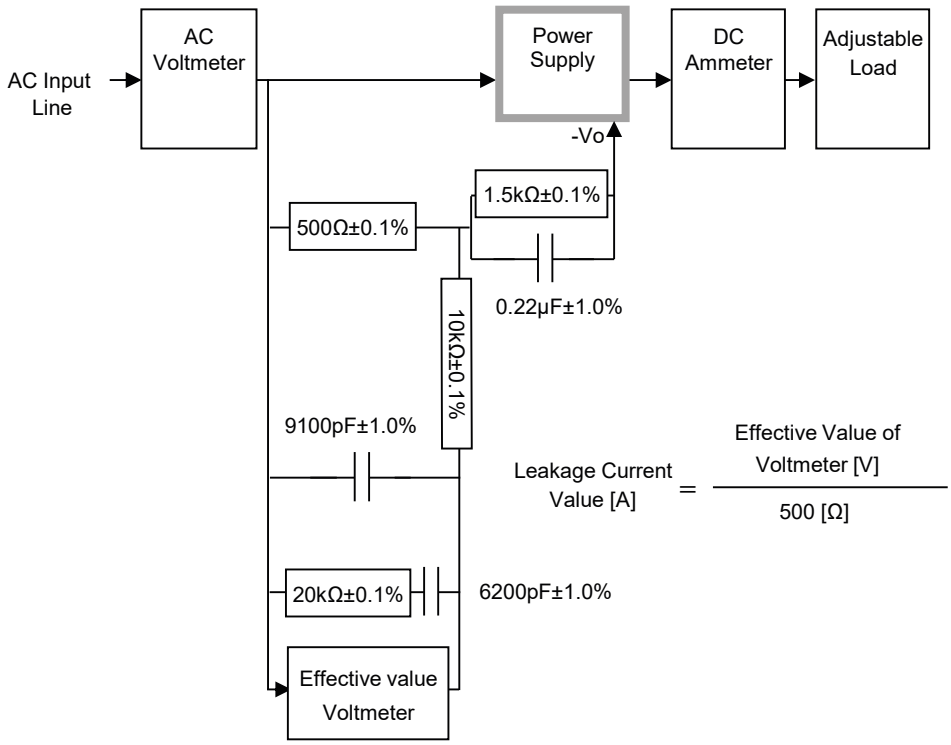

Figure C-3 (IEC62368-1 refer to IEC60990 Fig.5)