For Reference

# TEST DATA OF TEPS10F05

Regulated DC Power Supply
February 28, 2025

Approved by : Tetsuro Hirata
Design Manager

Prepared by : Junichi Otsubo
Design Engineer

COSEL CO.,LTD.

COSEL

# CONTENTS


1.Input Current (by Load Current) · · · · · · · · · · · · · · · · · · · · · · · · 1
2.Efficiency (by Load Current) · · · · · · · · · · · · · · · · · · · · · · · · · 2
3.Power Factor (by Load Current) · · · · · · · · · · · · · · · · · · · · · · · 3
4.Inrush Current · · · · · · · · · · · · · · · · · · · · · · · · · · · · · · · · · 4
5.Leakage Current · · · · · · · · · · · · · · · · · · · · · · · · · · · · · · · · 5
6.Line Regulation · · · · · · · · · · · · · · · · · · · · · · · · · · · · · · · · 6
7.Load Regulation · · · · · · · · · · · · · · · · · · · · · · · · · · · · · · · · 7
8.Ripple-Noise · · · · · · · · · · · · · · · · · · · · · · · · · · · · · · · · · · 7
9.Dynamic Load Response · · · · · · · · · · · · · · · · · · · · · · · · · · · 8
10.Rise and Fall Time · · · · · · · · · · · · · · · · · · · · · · · · · · · · · · 9
11.Hold-Up Time · · · · · · · · · · · · · · · · · · · · · · · · · · · · · · · · · 10
12.Instantaneous Interruption Compensation · · · · · · · · · · · · · · · · · 11
13.Overcurrent Protection · · · · · · · · · · · · · · · · · · · · · · · · · · · · 12
14.Ambient Temperature Drift · · · · · · · · · · · · · · · · · · · · · · · · · 13
15.Minimum Input Voltage for Regulated Output Voltage · · · · · · · · · · 13
16.Overvoltage Protection · · · · · · · · · · · · · · · · · · · · · · · · · · · · 13
17.Figure of Testing Circuitry · · · · · · · · · · · · · · · · · · · · · · · · · · 14
(Final Page 15)

COSEL

| | |
|---|---|
| Model | TEPS10F05 |
| Item | Input Current (by Load Current) |
| Object | ———————— |

Temperature 25°C
Testing Circuitry Figure A

1.Graph

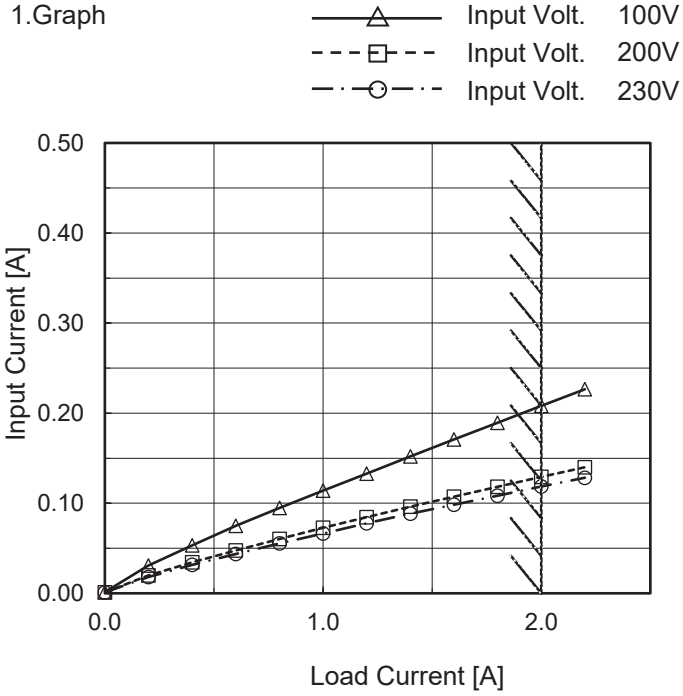


Note: Slanted line shows the range of the rated load current.

2.Values

| Load Current [A] | Input Current [A] | | |
|---|---|---|---|
| | Input Volt. 100[V] | Input Volt. 200[V] | Input Volt. 230[V] |
| 0.0 | 0.001 | 0.001 | 0.001 |
| 0.2 | 0.031 | 0.020 | 0.018 |
| 0.4 | 0.053 | 0.034 | 0.032 |
| 0.6 | 0.075 | 0.048 | 0.044 |
| 0.8 | 0.095 | 0.060 | 0.055 |
| 1.0 | 0.114 | 0.073 | 0.066 |
| 1.2 | 0.133 | 0.085 | 0.078 |
| 1.4 | 0.152 | 0.096 | 0.088 |
| 1.6 | 0.171 | 0.107 | 0.098 |
| 1.8 | 0.189 | 0.118 | 0.108 |
| 2.0 | 0.208 | 0.129 | 0.119 |
| 2.2 | 0.227 | 0.140 | 0.128 |

COSEL

| | |
|---|---|
| Model | TEPS10F05 |
| Item | Efficiency (by Load Current) |
| Object | ———————— |

Temperature 25°C
Testing Circuitry Figure A

1.Graph

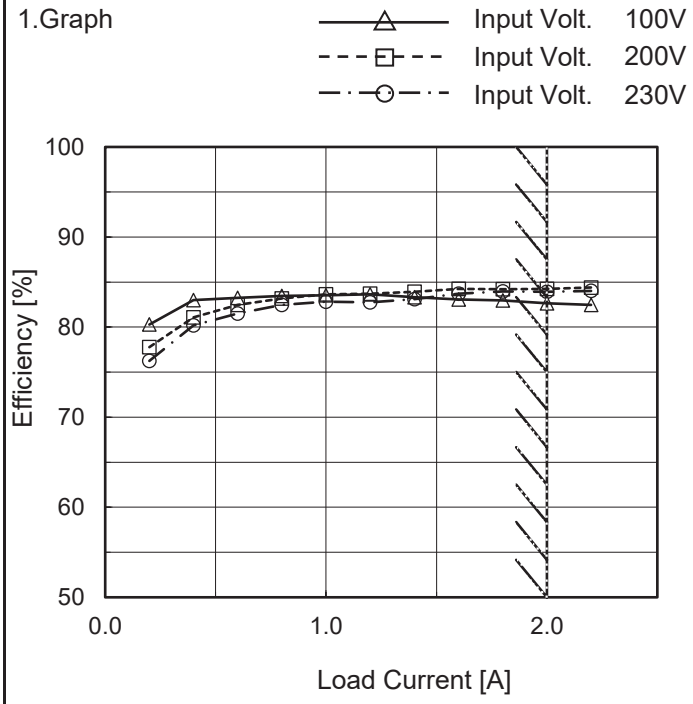


Note: Slanted line shows the range of the rated load current.

2.Values

| Load Current [A] | Efficiency [%] | | |
|---|---|---|---|
| | Input Volt. 100[V] | Input Volt. 200[V] | Input Volt. 230[V] |
| 0.0 | - | - | - |
| 0.2 | 80.3 | 77.8 | 76.2 |
| 0.4 | 83.0 | 81.1 | 80.2 |
| 0.6 | 83.3 | 82.5 | 81.5 |
| 0.8 | 83.4 | 83.2 | 82.5 |
| 1.0 | 83.5 | 83.6 | 82.8 |
| 1.2 | 83.6 | 83.7 | 82.8 |
| 1.4 | 83.3 | 83.9 | 83.1 |
| 1.6 | 83.1 | 84.2 | 83.7 |
| 1.8 | 83.0 | 84.2 | 83.9 |
| 2.0 | 82.6 | 84.2 | 83.9 |
| 2.2 | 82.5 | 84.4 | 84.0 |

COSEL

| | |
|---|---|
| Model | TEPS10F05 |
| Item | Power Factor (by Load Current) |
| Object | ———————— |

Temperature 25°C
Testing Circuitry Figure A

1.Graph

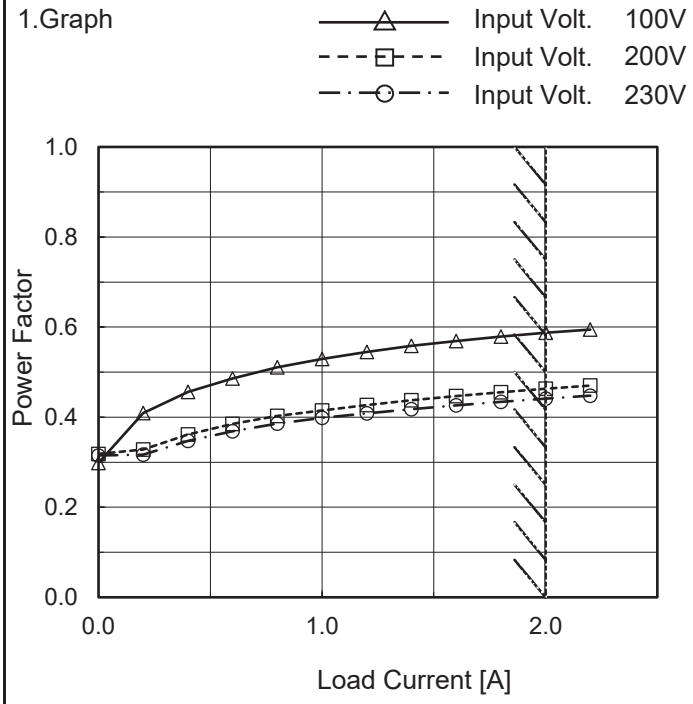


Note: Slanted line shows the range of the rated load current.

2.Values

| Load Current [A] | Power Factor | | |
|---|---|---|---|
| | Input Volt. 100[V] | Input Volt. 200[V] | Input Volt. 230[V] |
| 0.0 | 0.299 | 0.318 | 0.315 |
| 0.2 | 0.409 | 0.328 | 0.317 |
| 0.4 | 0.456 | 0.361 | 0.348 |
| 0.6 | 0.486 | 0.385 | 0.369 |
| 0.8 | 0.510 | 0.403 | 0.385 |
| 1.0 | 0.529 | 0.415 | 0.399 |
| 1.2 | 0.545 | 0.427 | 0.408 |
| 1.4 | 0.558 | 0.438 | 0.418 |
| 1.6 | 0.569 | 0.447 | 0.426 |
| 1.8 | 0.579 | 0.455 | 0.434 |
| 2.0 | 0.587 | 0.463 | 0.441 |
| 2.2 | 0.594 | 0.470 | 0.448 |

COSEL

| | | |
|---|---|---|
| Model | TEPS10F05 | |
| Item | Inrush Current | Temperature 25°C<br>Testing Circuitry Figure A |
| Object | ———————— | |

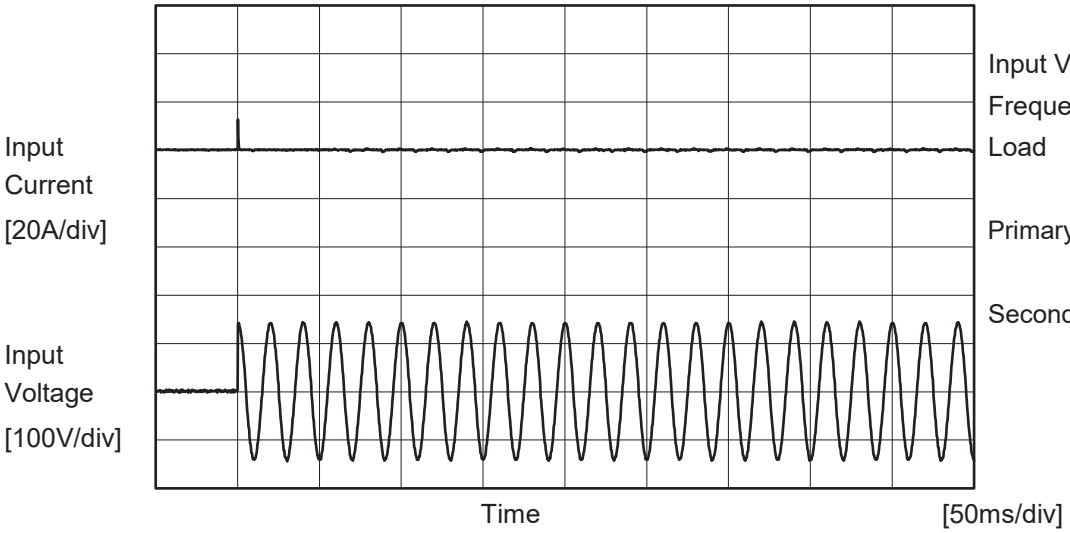


Input Voltage 100 V
Frequency 50 Hz
Load 100 %

Primary inrush current :
12.8 A
Secondary inrush current :
0.9 A

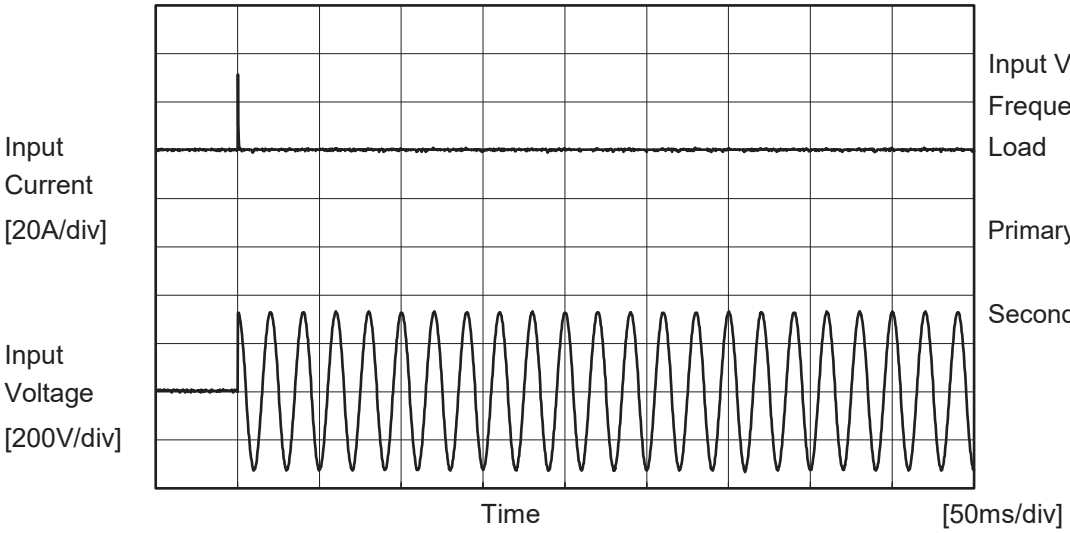


Input Voltage 230 V
Frequency 50 Hz
Load 100 %

Primary inrush current :
31.4 A
Secondary inrush current :
1.0 A

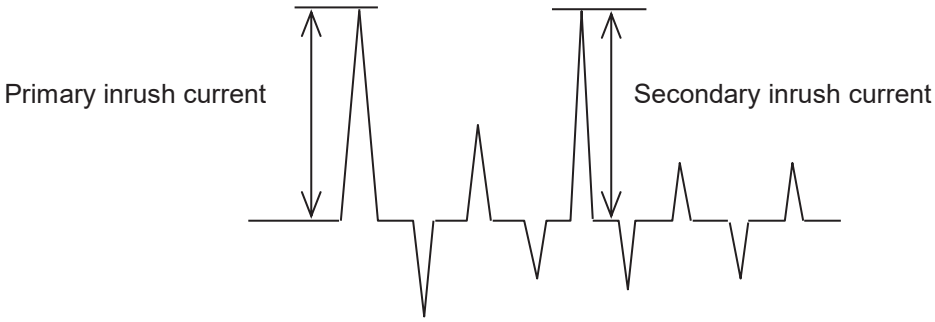

COSEL

| | | |
|---|---|---|
| Model | TEPS10F05 | |
| Item | Leakage Current | Temperature 25°C<br>Testing Circuitry Figure C |
| Object | ———————— | |

1.Results

[μA]

| Standards | Testing Circuitry | Measuring Method | Input Volt. | | | Note |
|---|---|---|---|---|---|---|
| | | | 100 [V] | 230 [V] | 264 [V] | |
| DEN-AN | Figure C-1 | Both phases | 24 | 47 | 53 | Operation |
| | | One of phases | 28 | 69 | 81 | Stand by |
| IEC62368-1 | Figure C-2 | Both phases | 19 | 44 | 52 | Operation |
| | | One of phases | 28 | 69 | 81 | Stand by |
| | Figure C-3 | Both phases | 19 | 45 | 52 | Operation |
| | | One of phases | 28 | 69 | 81 | Stand by |

The value for "One of phases" is the reference value only.

2.Condition

Leakage current value is concluded after measuring both phases of AC input and by choosing the larger one.

COSEL

| | |
|---|---|
| Model | TEPS10F05 |
| Item | Line Regulation |
| Object | +5V2A |

Temperature 25°C
Testing Circuitry Figure A

1.Graph

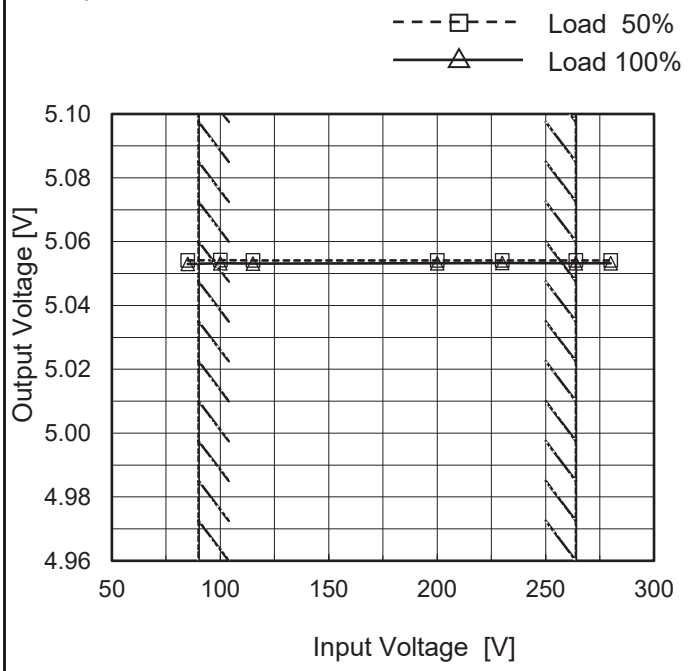


Note: Slanted line shows the range of the rated input voltage.

2.Values

| Input Voltage [V] | Output Voltage [V] | |
|---|---|---|
| | Load 50% | Load 100% |
| 85 | 5.054 | 5.053 |
| 100 | 5.054 | 5.053 |
| 115 | 5.054 | 5.053 |
| 200 | 5.054 | 5.053 |
| 230 | 5.054 | 5.053 |
| 264 | 5.054 | 5.053 |
| 280 | 5.054 | 5.053 |
| -- | - | - |
| -- | - | - |

COSEL

| | |
|---|---|
| Model | TEPS10F05 |
| Item | Load Regulation |
| Object | +5V2A |

Temperature 25°C
Testing Circuitry Figure A

1.Graph

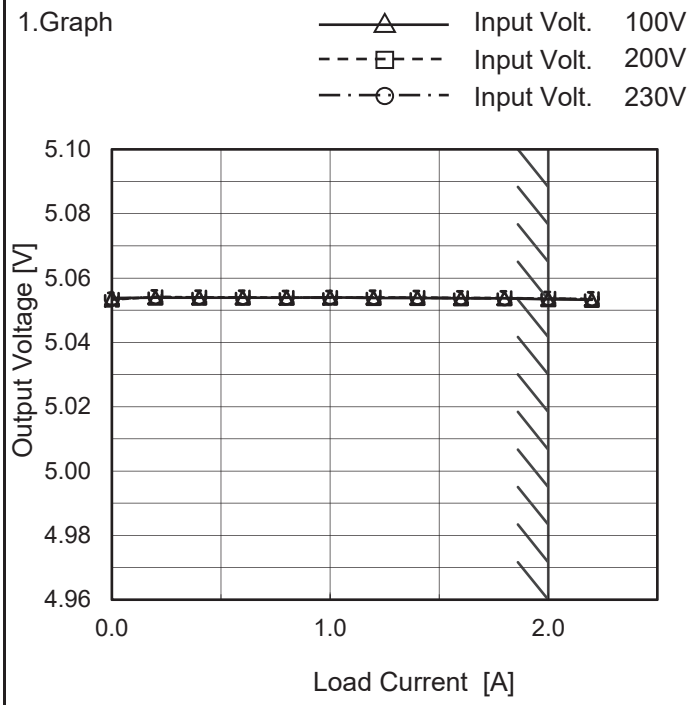


Note: Slanted line shows the range of the rated load current.

2.Values

| Load Current [A] | Output Voltage [V] | | |
|---|---|---|---|
| | Input Volt. 100[V] | Input Volt. 200[V] | Input Volt. 230[V] |
| 0.0 | 5.054 | 5.053 | 5.054 |
| 0.2 | 5.054 | 5.054 | 5.054 |
| 0.4 | 5.054 | 5.054 | 5.054 |
| 0.6 | 5.054 | 5.054 | 5.054 |
| 0.8 | 5.054 | 5.054 | 5.054 |
| 1.0 | 5.054 | 5.054 | 5.054 |
| 1.2 | 5.054 | 5.054 | 5.054 |
| 1.4 | 5.054 | 5.054 | 5.054 |
| 1.6 | 5.054 | 5.054 | 5.054 |
| 1.8 | 5.054 | 5.054 | 5.054 |
| 2.0 | 5.053 | 5.054 | 5.054 |
| 2.2 | 5.053 | 5.053 | 5.054 |

| | |
|---|---|
| Item | Ripple-Noise |
| Object | +5V2A |

Temperature 25°C
Testing Circuitry Figure B

1.Graph

Input Voltage 230V
Load 100%

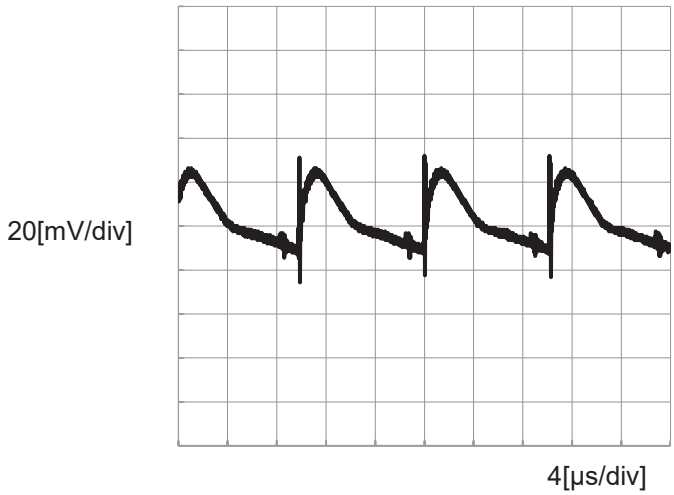

COSEL

| | | |
|---|---|---|
| Model | TEPS10F05 | |
| Item | Dynamic Load Response | Temperature 25°C<br>Testing Circuitry Figure A |
| Object | +5V2A | |

Input Volt. 230 V
Cycle 1000 ms

Response. t1=t2=50µs. Typ

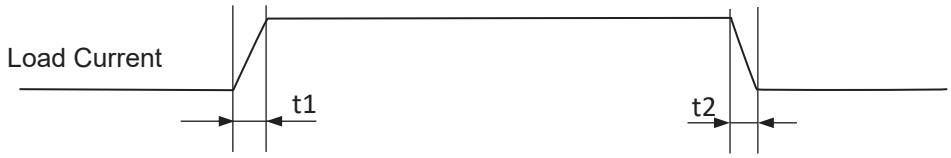


Load 0%(0A) ←→
Load 100%(2A)

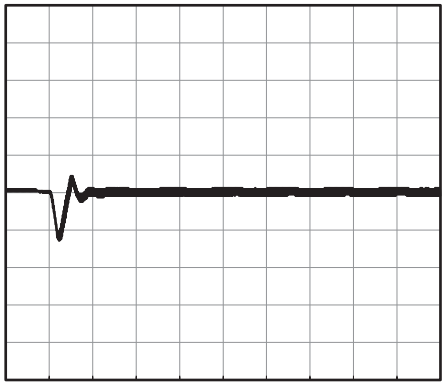

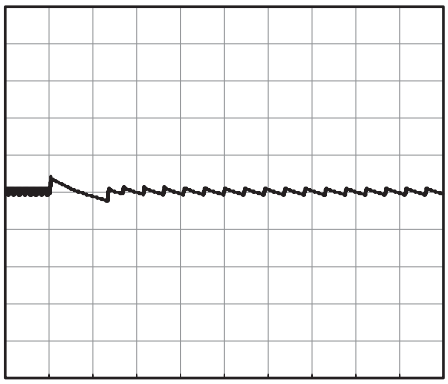

200[mV/div]

1[ms/div]

10[ms/div]

Load 50%(1A) ←→
Load 100%(2A)

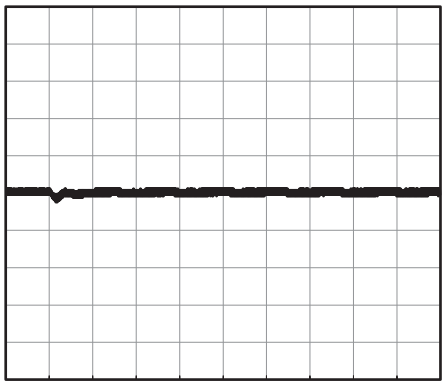

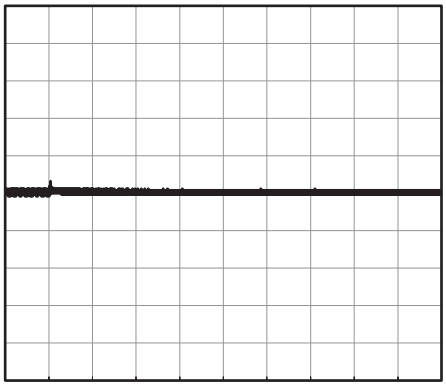

200[mV/div]

1[ms/div]

10[ms/div]

Load 0%(0A) ←→
Load 50%(1A)

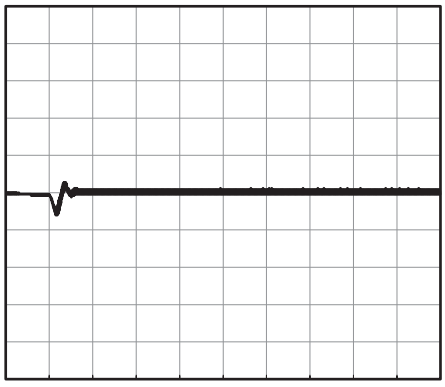

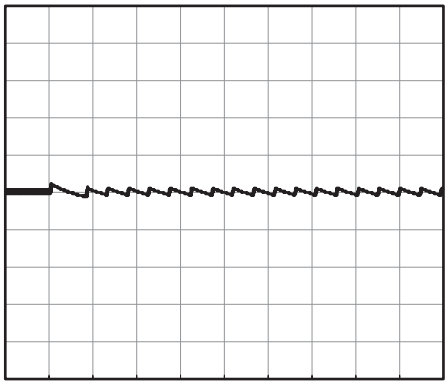

200[mV/div]

1[ms/div]

10[ms/div]

COSEL

| | | |
|---|---|---|
| Model | TEPS10F05 | |
| Item | Rise and Fall Time | Temperature 25°C<br>Testing Circuitry Figure A |
| Object | +5V2A | |

1.Graph

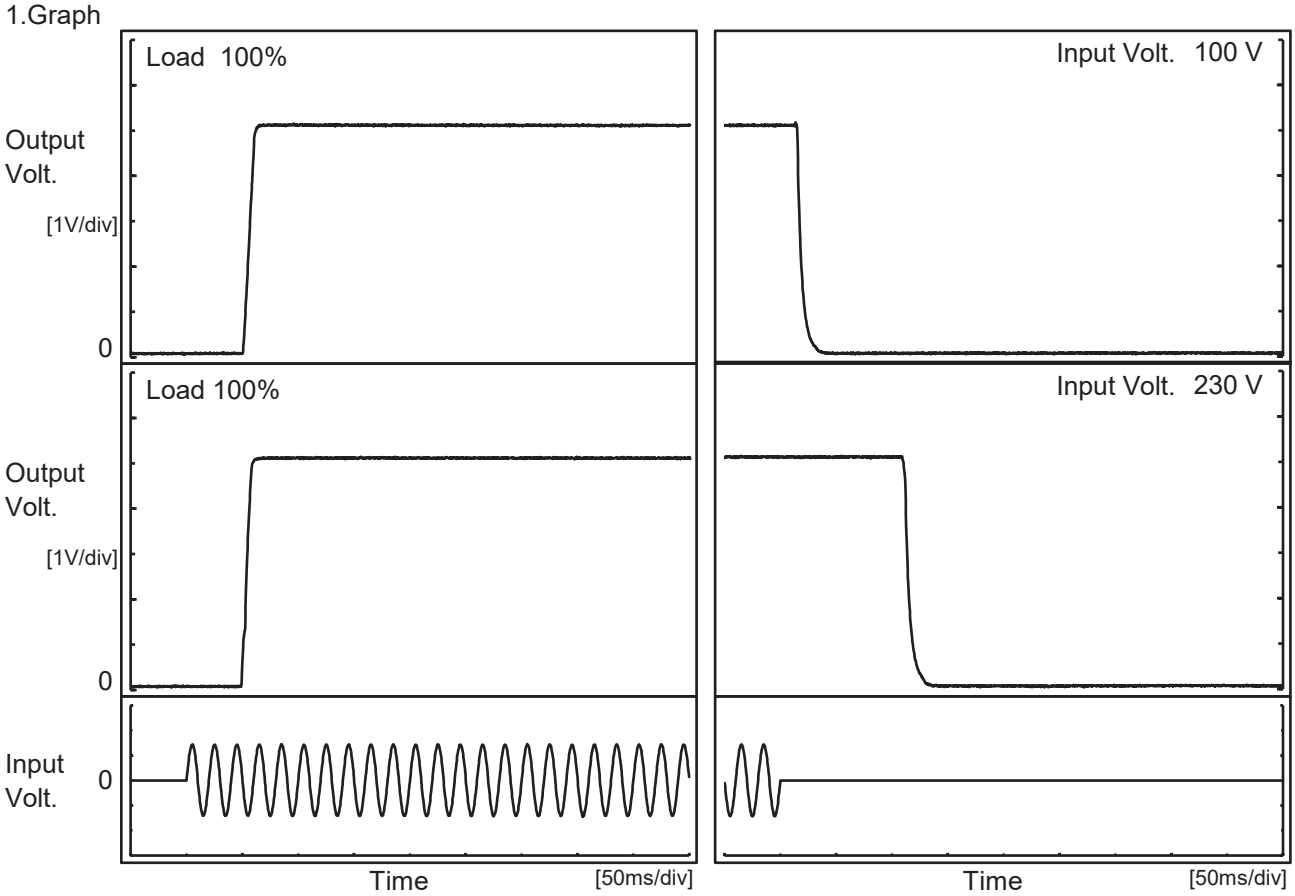


2.Values

[ms]

| Input Volt. \ Time | Td | Tr | Ts | Th | Tf |
|---|---|---|---|---|---|
| 100V | 51.5 | 8.5 | 60.0 | 15.8 | 9.5 |
| 230V | 49.5 | 7.8 | 57.3 | 112.0 | 9.8 |

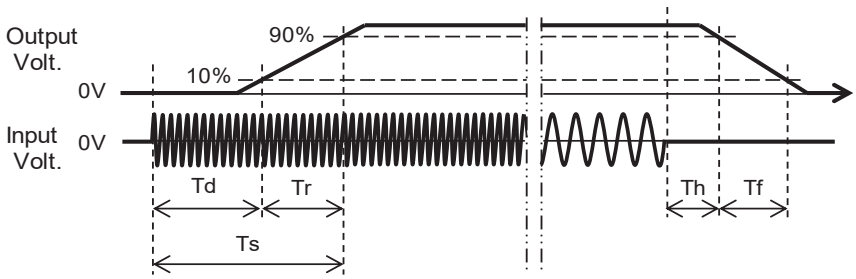

COSEL

| | |
|---|---|
| Model | TEPS10F05 |
| Item | Hold-Up Time |
| Object | +5V2A |

Temperature 25°C
Testing Circuitry Figure A

1.Graph

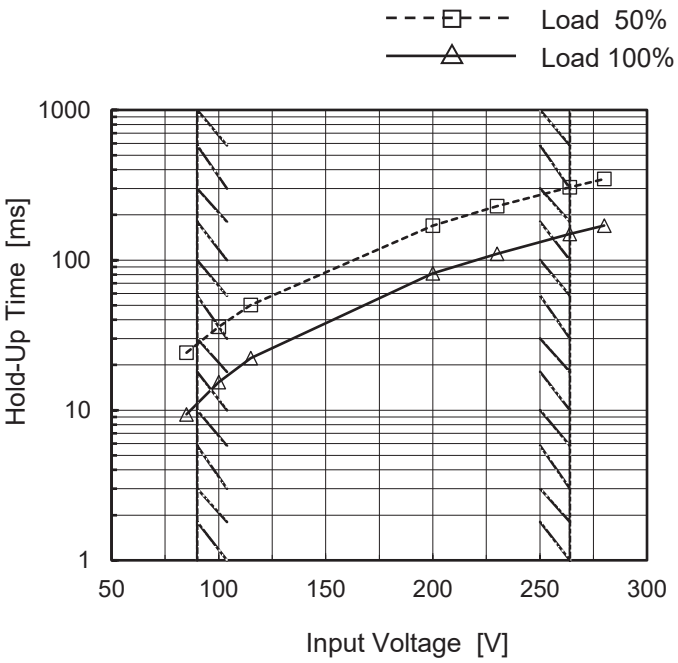


This duration covers from Shut-off of input voltage to the moment when output voltage descends to the rated range of voltage accuracy.
Note: Slanted line shows the range of the rated input voltage.

2.Values

| Input Voltage [V] | Hold-Up Time [ms] | |
|---|---|---|
| | Load 50% | Load 100% |
| 85 | 24 | 9 |
| 100 | 36 | 15 |
| 115 | 50 | 22 |
| 200 | 170 | 82 |
| 230 | 228 | 110 |
| 264 | 306 | 149 |
| 280 | 347 | 170 |
| -- | - | - |
| -- | - | - |

COSEL

| | |
|---|---|
| Model | TEPS10F05 |
| Item | Instantaneous Interruption Compensation |
| Object | +5V2A |

Temperature 25°C
Testing Circuitry Figure A

1.Graph

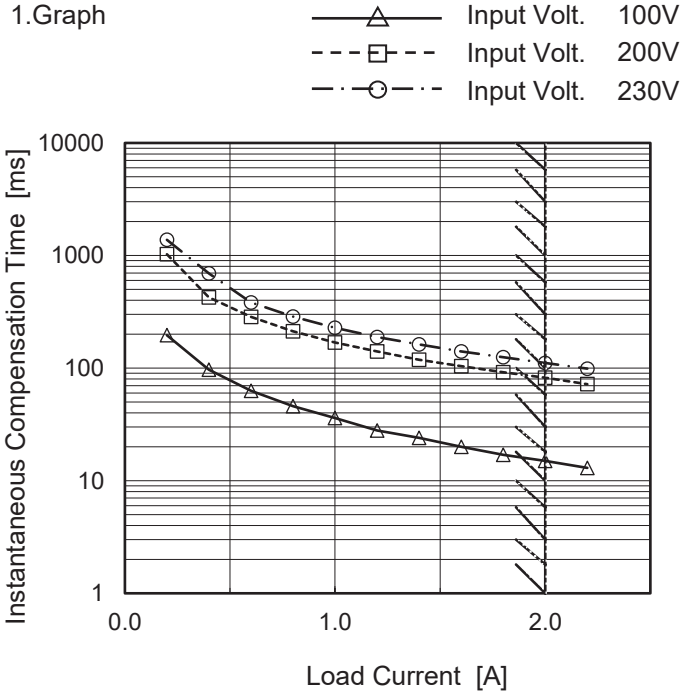


Note: Slanted line shows the range of the rated load current.

2.Values

| Load Current [A] | Time [ms] | | |
|---|---|---|---|
| | Input Volt. 100[V] | Input Volt. 200[V] | Input Volt. 230[V] |
| 0.0 | - | - | - |
| 0.2 | 196 | 1026 | 1379 |
| 0.4 | 97 | 426 | 693 |
| 0.6 | 63 | 285 | 382 |
| 0.8 | 46 | 213 | 287 |
| 1.0 | 36 | 169 | 229 |
| 1.2 | 28 | 141 | 189 |
| 1.4 | 24 | 119 | 162 |
| 1.6 | 20 | 104 | 141 |
| 1.8 | 17 | 92 | 125 |
| 2.0 | 15 | 82 | 111 |
| 2.2 | 13 | 72 | 99 |

COSEL

| | |
|---|---|
| Model | TEPS10F05 |
| Item | Overcurrent Protection |
| Object | +5V2A |

Temperature 25°C
Testing Circuitry Figure A

1.Graph

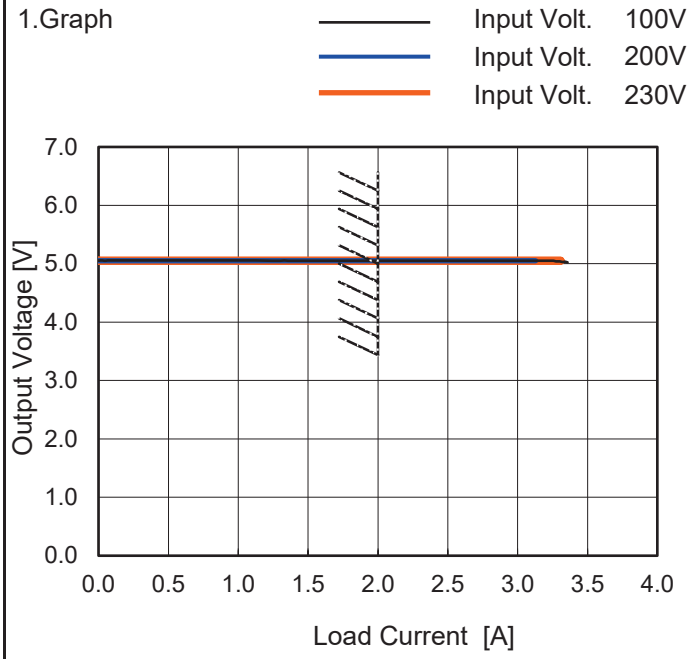


Note: Slanted line shows the range of the rated load current.

Overcurrent protection is Hiccup mode.

2.Values

| Output Voltage [V] | Load Current [A] | | |
|---|---|---|---|
| | Input Volt. 100[V] | Input Volt. 200[V] | Input Volt. 230[V] |
| 5.00 | 3.36 | 3.13 | 3.31 |
| 4.75 | - | - | - |
| 4.50 | - | - | - |
| 4.00 | - | - | - |
| 3.50 | - | - | - |
| 3.00 | - | - | - |
| 2.50 | - | - | - |
| 2.00 | - | - | - |
| 1.50 | - | - | - |
| 1.00 | - | - | - |
| 0.50 | - | - | - |
| 0.00 | - | - | - |

COSEL

| | |
|---|---|
| Model | TEPS10F05 |
| Item | Ambient Temperature Drift |
| Object | +5V2A |

Testing Circuitry Figure A

1.Values

Load 100%

| Ambient Temperature[℃] | Output Voltage [V] | | |
|---|---|---|---|
| | Input Volt. 100V | Input Volt. 200V | Input Volt. 230V |
| -20 | 5.057 | 5.057 | 5.057 |
| 25 | 5.054 | 5.054 | 5.054 |
| 60 | 5.045 | 5.046 | 5.046 |

| | |
|---|---|
| Item | Minimum Input Voltage for Regulated Output Voltage |
| Object | +5V2A |

Testing Circuitry Figure A

1.Values

| Ambient Temperature[℃] | Input Voltage [V] | |
|---|---|---|
| | Load 50% | Load 100% |
| -20 | 39 | 55 |
| 25 | 36 | 52 |
| 60 | 36 | 52 |

| | |
|---|---|
| Item | Overvoltage Protection |
| Object | +5V2A |

Testing Circuitry Figure A

1.Values

Load 0%

| Ambient Temperature[℃] | Operating Point [V] | |
|---|---|---|
| | Input Volt. 100V | Input Volt. 230V |
| -20 | 6.16 | 6.16 |
| 25 | 6.10 | 6.10 |
| 60 | 6.10 | 6.10 |

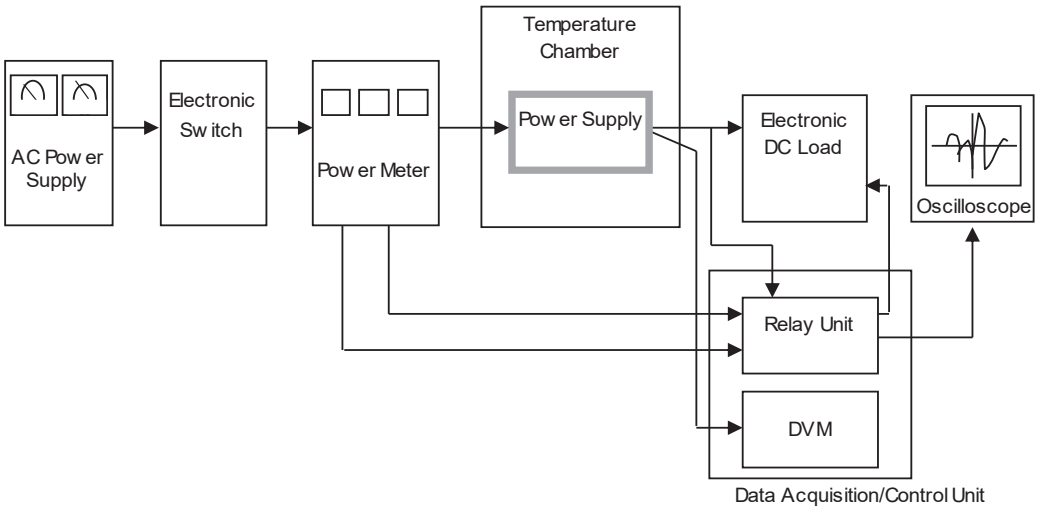


Figure A

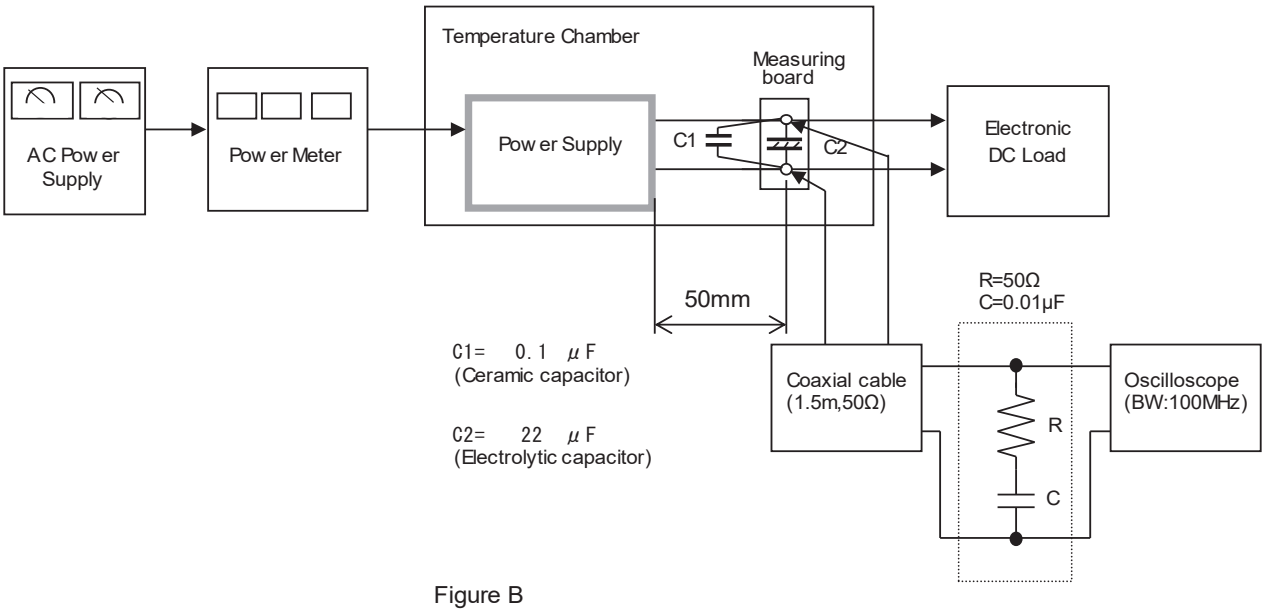


Figure B

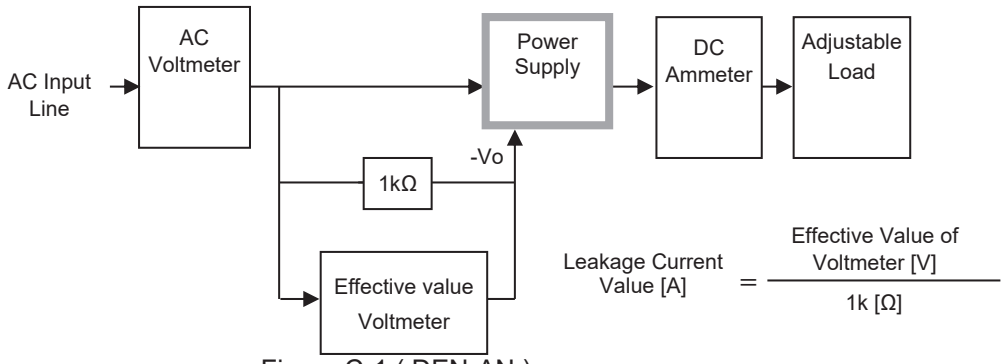


Figure C-1 ( DEN-AN )

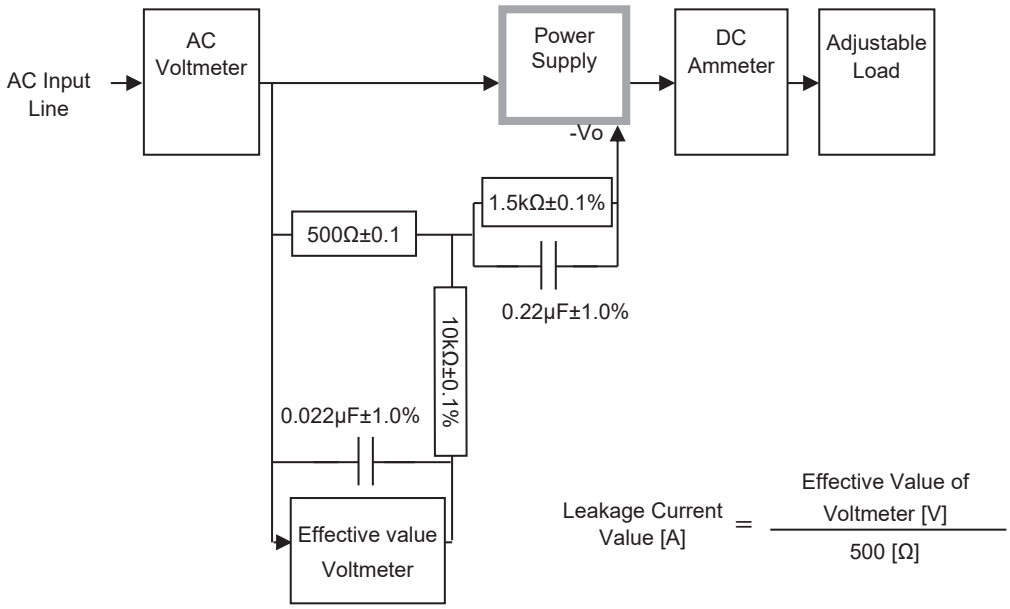


Figure C-2 ( IEC62368-1 refer to IEC60990 Fig.4 )

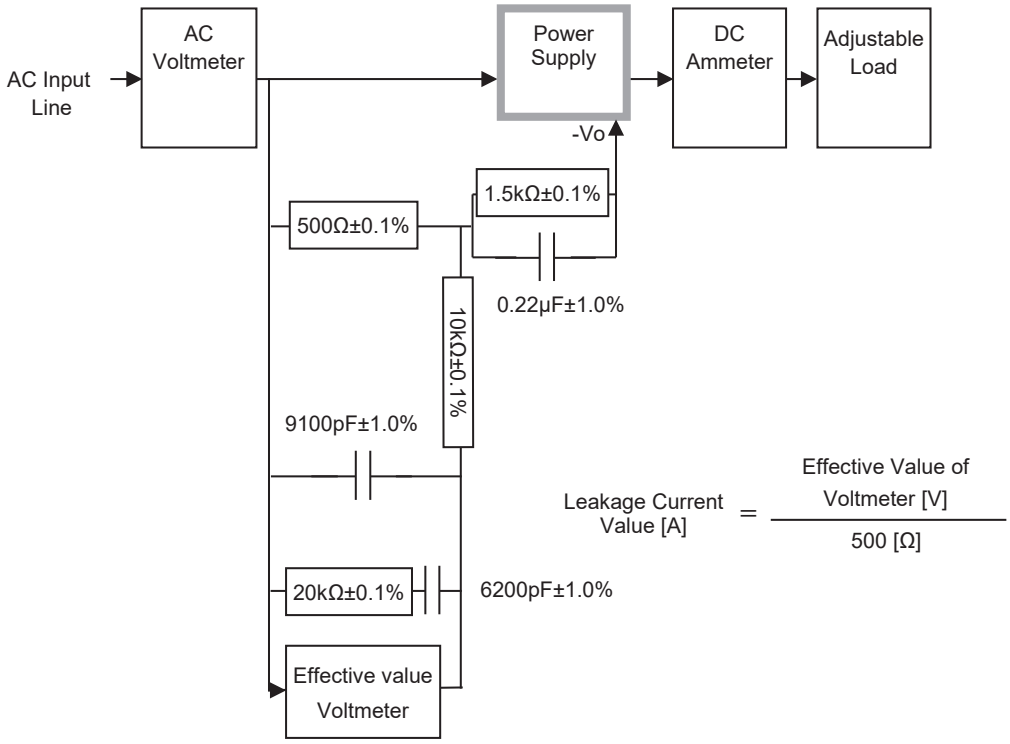


Figure C-3 ( IEC62368-1 refer to IEC60990 Fig.5 )