For Reference

TEST DATA OF TEPS10F12

Regulated DC Power Supply
February 28, 2025

Approved by : Tetsuro Hirata
Design Manager

Prepared by : Junichi Otsubo
Design Engineer

COSEL CO.,LTD.

COSEL

CONTENTS

1.Input Current (by Load Current) · 1
2.Efficiency (by Load Current) · 2
3.Power Factor (by Load Current) · 3
4.Inrush Current · 4
5.Leakage Current · 5
6.Line Regulation · 6
7.Load Regulation · 7
8.Ripple-Noise · 7
9.Dynamic Load Response · 8
10.Rise and Fall Time · 9
11.Hold-Up Time · 10
12.Instantaneous Interruption Compensation · · · · · · · · · · · · · · · · · 11
13.Overcurrent Protection · 12
14.Ambient Temperature Drift · 13
15.Minimum Input Voltage for Regulated Output Voltage · · · · · · · · · · 13
16.Overvoltage Protection · 13
17.Figure of Testing Circuitry · 14
(Final Page 15)

COSEL

Model	TEPS10F12
Item	Input Current (by Load Current)
Object	————————

Temperature 25°C
Testing Circuitry Figure A

1.Graph

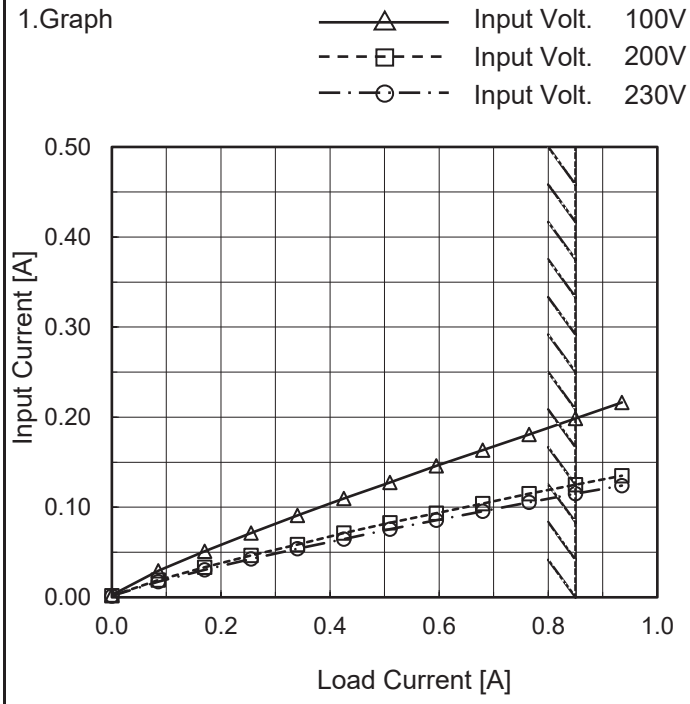

Note: Slanted line shows the range of the rated load current.

2.Values

Load Current [A]	Input Current [A]		
	Input Volt. 100[V]	Input Volt. 200[V]	Input Volt. 230[V]
0.000	0.003	0.002	0.002
0.085	0.029	0.019	0.017
0.170	0.051	0.033	0.031
0.255	0.072	0.046	0.043
0.340	0.091	0.059	0.054
0.425	0.110	0.071	0.065
0.510	0.128	0.083	0.076
0.595	0.146	0.093	0.086
0.680	0.163	0.104	0.096
0.765	0.181	0.115	0.106
0.850	0.199	0.125	0.115
0.935	0.216	0.135	0.124

COSEL

Model	TEPS10F12
Item	Efficiency (by Load Current)
Object	————————

Temperature 25°C
Testing Circuitry Figure A

1.Graph

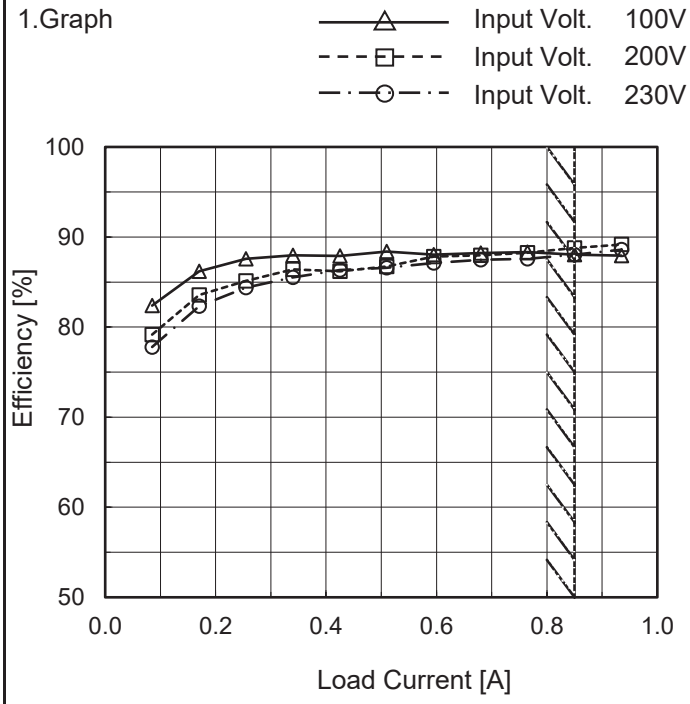

Note: Slanted line shows the range of the rated load current.

2.Values

Load Current [A]	Efficiency [%]		
	Input Volt. 100[V]	Input Volt. 200[V]	Input Volt. 230[V]
0.000	-	-	-
0.085	82.4	79.2	77.8
0.170	86.2	83.6	82.3
0.255	87.6	85.1	84.4
0.340	88.0	86.4	85.5
0.425	87.9	86.2	86.3
0.510	88.4	86.7	86.6
0.595	88.1	87.8	87.1
0.680	88.2	88.0	87.5
0.765	88.3	88.3	87.6
0.850	88.1	88.8	88.0
0.935	87.9	89.2	88.6

COSEL

Model	TEPS10F12
Item	Power Factor (by Load Current)
Object	————————

Temperature 25°C
Testing Circuitry Figure A

1.Graph

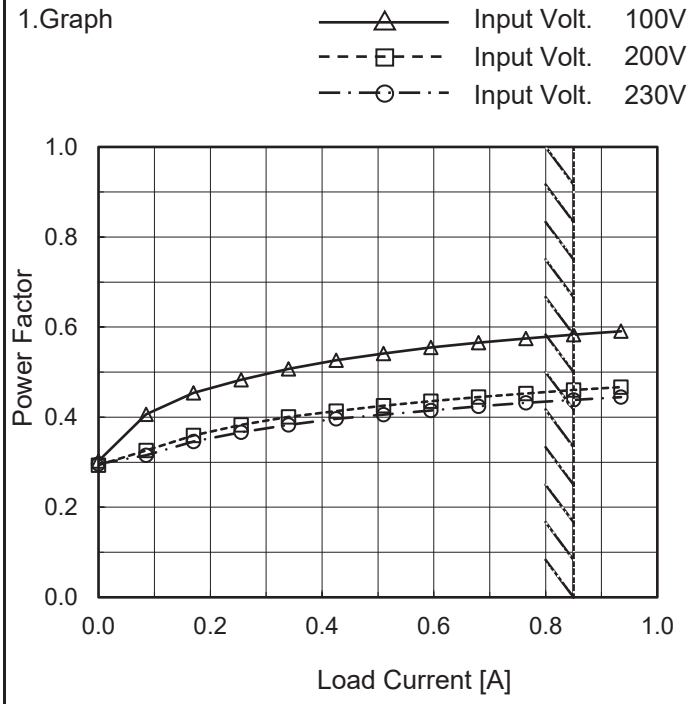

Note: Slanted line shows the range of the rated load current.

2.Values

Load Current [A]	Power Factor		
	Input Volt. 100[V]	Input Volt. 200[V]	Input Volt. 230[V]
0.000	0.303	0.294	0.296
0.085	0.407	0.326	0.316
0.170	0.454	0.359	0.346
0.255	0.483	0.383	0.367
0.340	0.507	0.401	0.383
0.425	0.526	0.413	0.396
0.510	0.541	0.425	0.405
0.595	0.555	0.436	0.415
0.680	0.566	0.445	0.424
0.765	0.575	0.453	0.432
0.850	0.583	0.460	0.438
0.935	0.591	0.467	0.444

COSEL

Model	TEPS10F12	
Item	Inrush Current	Temperature 25°C Testing Circuitry Figure A
Object	————————	

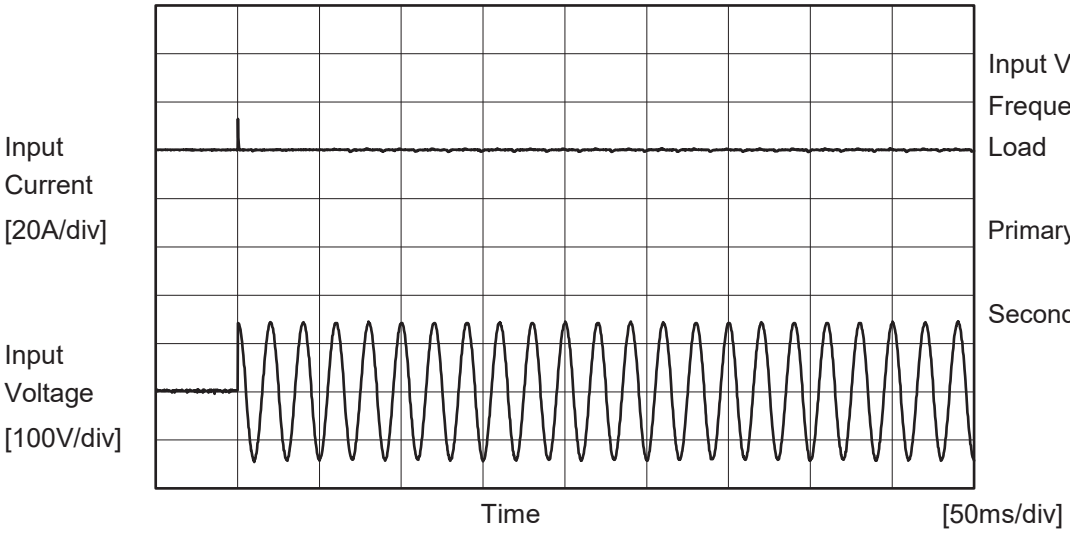

Input Voltage 100 V
Frequency 50 Hz
Load 100 %

Primary inrush current :
13.0 A
Secondary inrush current :
0.9 A

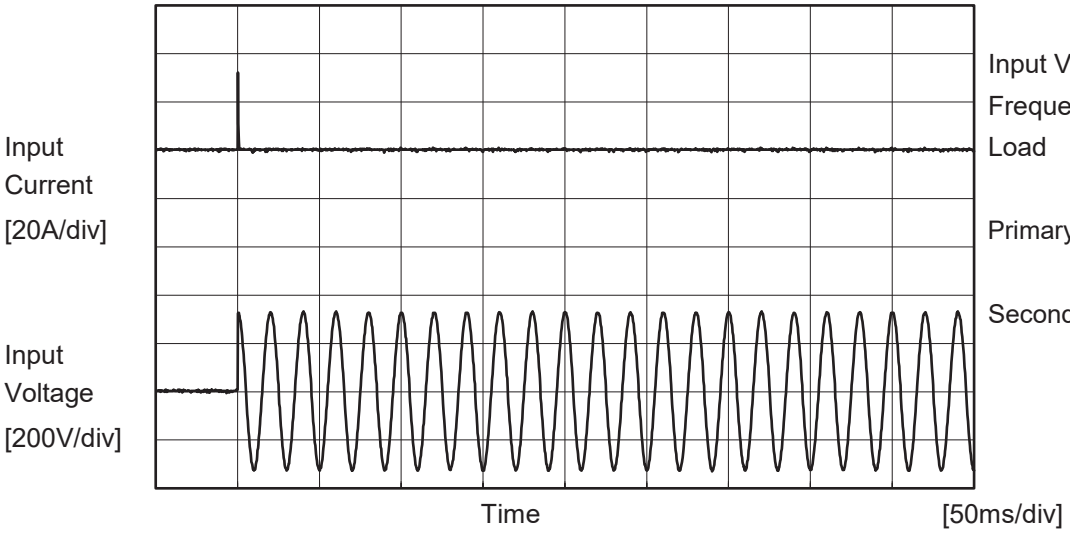

Input Voltage 230 V
Frequency 50 Hz
Load 100 %

Primary inrush current :
32.2 A
Secondary inrush current :
1.0 A

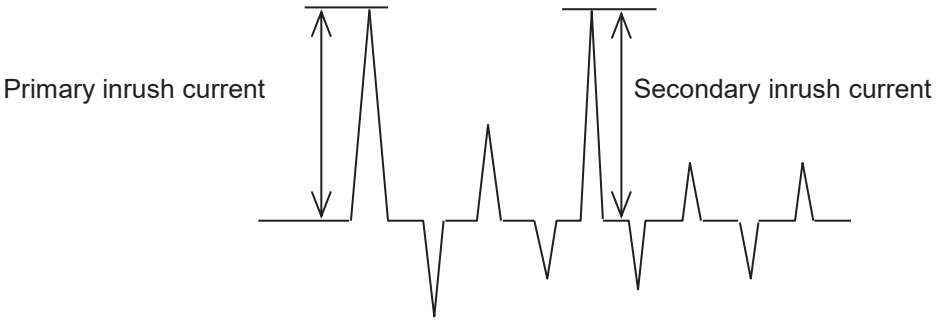

COSEL

Model	TEPS10F12	
Item	Leakage Current	Temperature 25°C Testing Circuitry Figure C
Object	————————	

1.Results

[μA]

Standards	Testing Circuitry	Measuring Method	Input Volt.			Note
			100 [V]	230 [V]	264 [V]	
DEN-AN	Figure C-1	Both phases	24	47	53	Operation
		One of phases	28	69	81	Stand by
IEC62368-1	Figure C-2	Both phases	19	44	52	Operation
		One of phases	28	69	81	Stand by
	Figure C-3	Both phases	19	45	52	Operation
		One of phases	28	69	81	Stand by

The value for "One of phases" is the reference value only.

2.Condition

Leakage current value is concluded after measuring both phases of AC input and by choosing the larger one.

COSEL

Model	TEPS10F12
Item	Line Regulation
Object	+12V0.85A

Temperature 25°C
Testing Circuitry Figure A

1.Graph

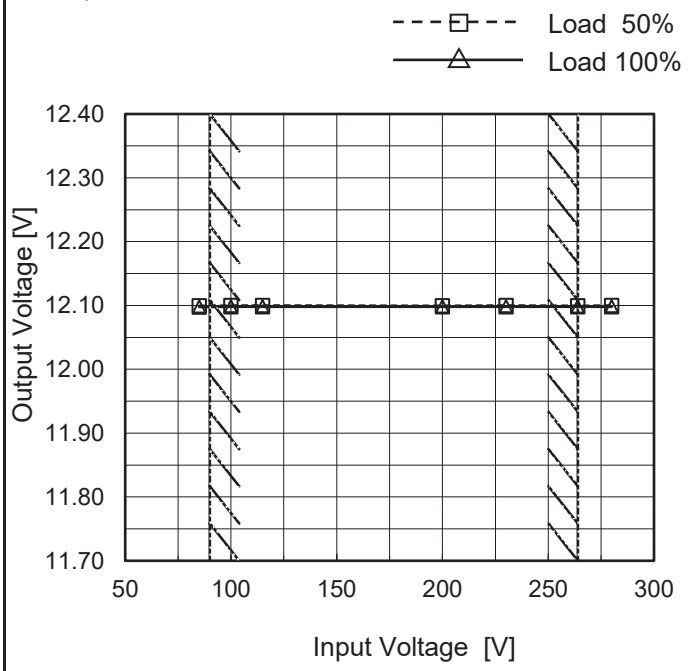

Note: Slanted line shows the range of the rated input voltage.

2.Values

Input Voltage [V]	Output Voltage [V]	
	Load 50%	Load 100%
85	12.099	12.098
100	12.100	12.098
115	12.100	12.098
200	12.100	12.098
230	12.100	12.098
264	12.100	12.098
280	12.100	12.098
--	-	-
--	-	-

COSEL

Model	TEPS10F12
Item	Load Regulation
Object	+12V0.85A

Temperature 25°C
Testing Circuitry Figure A

1.Graph

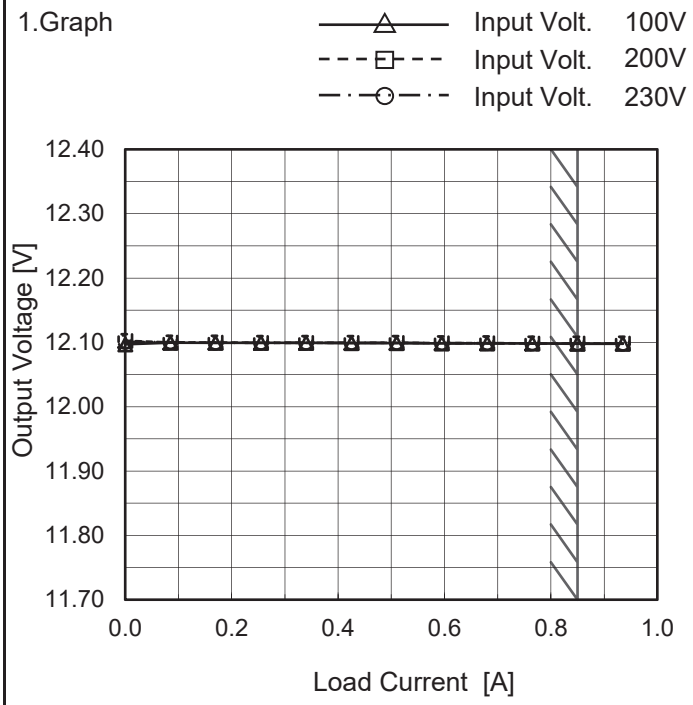

Note: Slanted line shows the range of the rated load current.

2.Values

Load Current [A]	Output Voltage [V]		
	Input Volt. 100[V]	Input Volt. 200[V]	Input Volt. 230[V]
0.000	12.097	12.103	12.101
0.085	12.100	12.100	12.100
0.170	12.099	12.100	12.100
0.255	12.099	12.099	12.099
0.340	12.099	12.099	12.099
0.425	12.099	12.099	12.099
0.510	12.099	12.099	12.099
0.595	12.099	12.099	12.099
0.680	12.098	12.099	12.099
0.765	12.098	12.098	12.098
0.850	12.098	12.098	12.098
0.935	12.098	12.098	12.098

Item	Ripple-Noise
Object	+12V0.85A

Temperature 25°C
Testing Circuitry Figure B

1.Graph

Input Voltage 230V
Load 100%

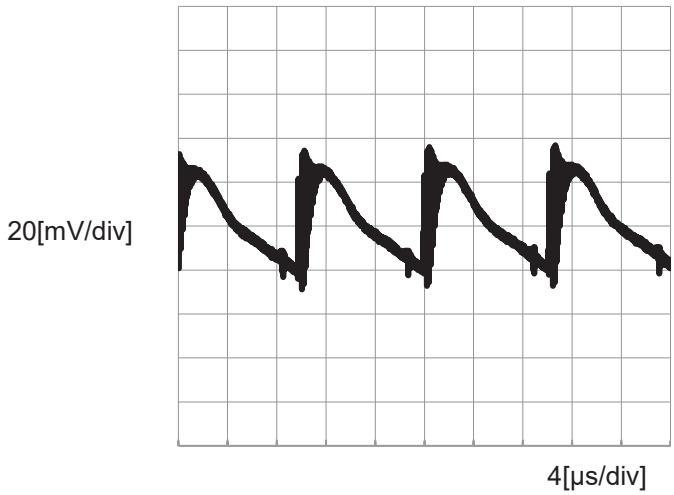

COSEL

Model	TEPS10F12	
Item	Dynamic Load Response	Temperature 25°C Testing Circuitry Figure A
Object	+12V0.85A	

Input Volt. 230 V
Cycle 1000 ms

Response. t1=t2=50µs. Typ

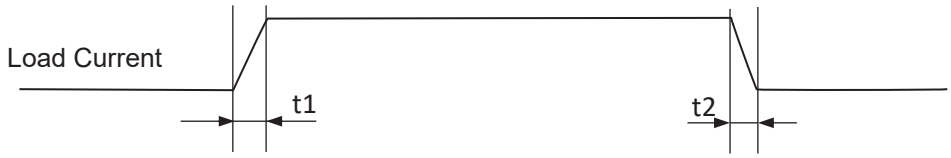

Load 0%(0A) ←→
Load 100%(0.85A)

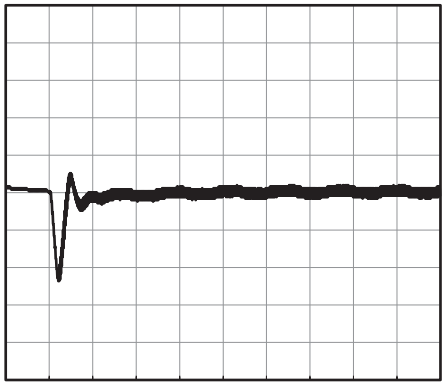

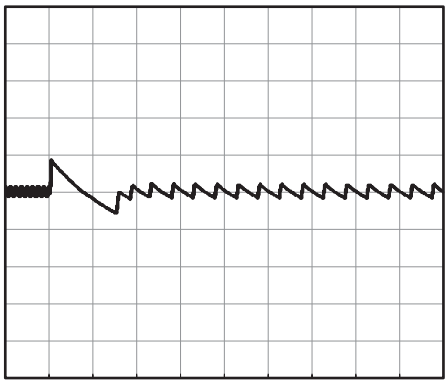

200[mV/div]

1[ms/div]

10[ms/div]

Load 50%(0.425A) ←→
Load 100%(0.85A)

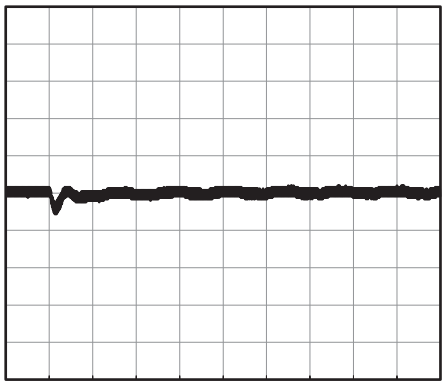

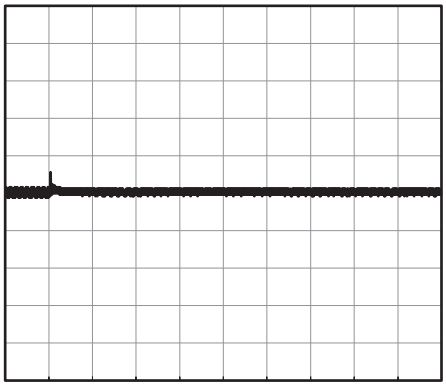

200[mV/div]

1[ms/div]

10[ms/div]

Load 0%(0A) ←→
Load 50%(0.425A)

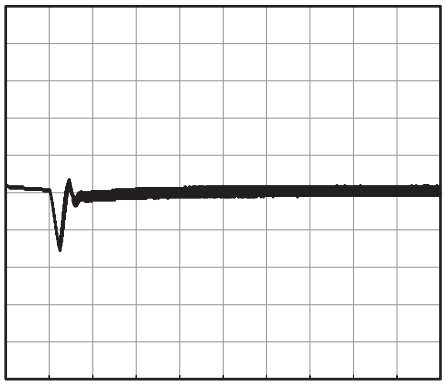

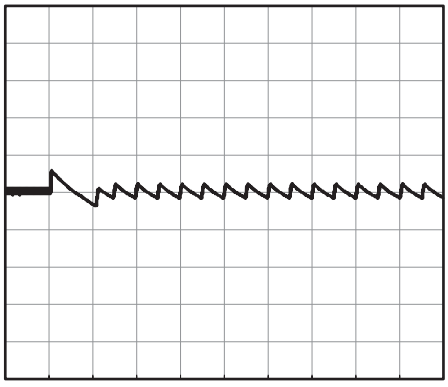

200[mV/div]

1[ms/div]

10[ms/div]

COSEL

Model	TEPS10F12	
Item	Rise and Fall Time	Temperature 25°C Testing Circuitry Figure A
Object	+12V0.85A	

1.Graph

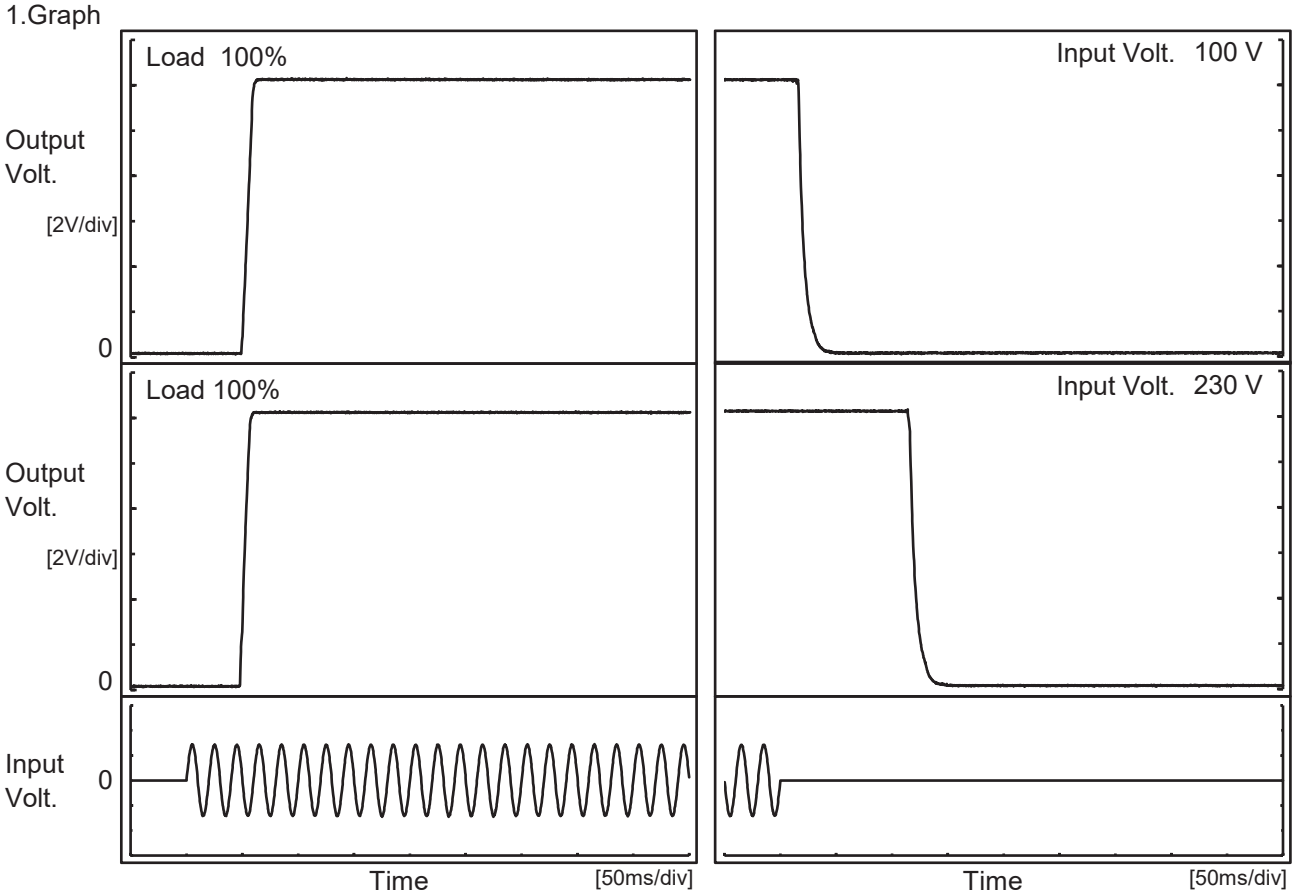

2.Values

[ms]

Input Volt. \ Time	Td	Tr	Ts	Th	Tf
100V	50.0	8.5	58.5	17.0	11.8
230V	48.0	8.0	56.0	116.5	12.8

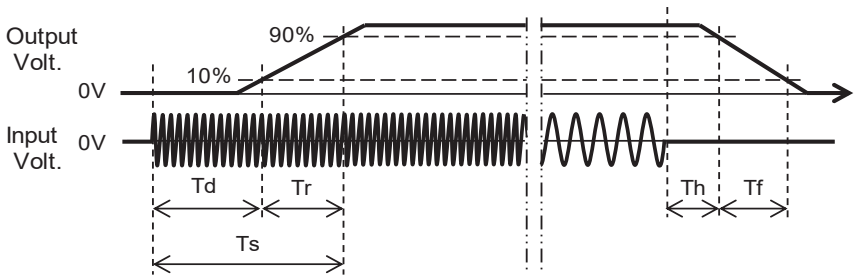

BC-12091

COSEL

Model	TEPS10F12
Item	Hold-Up Time
Object	+12V0.85A

Temperature 25°C
Testing Circuitry Figure A

1.Graph

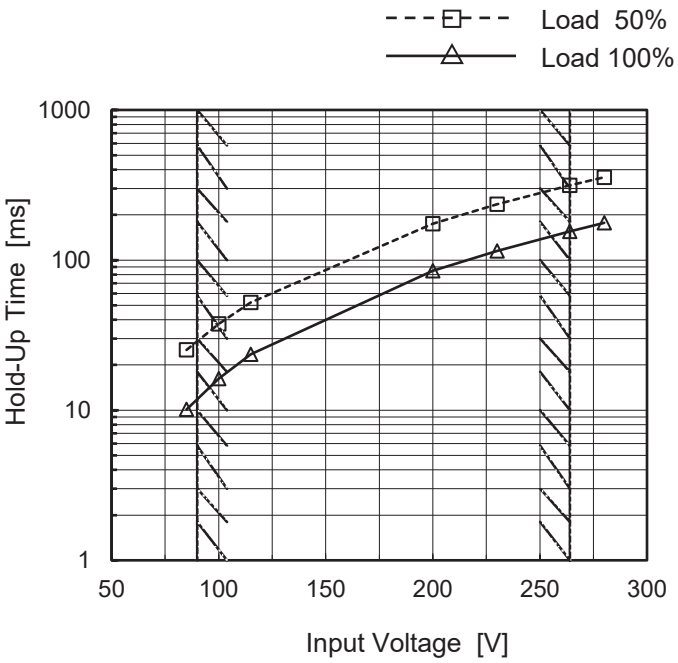

This duration covers from Shut-off of input voltage to the moment when output voltage descends to the rated range of voltage accuracy.
Note: Slanted line shows the range of the rated input voltage.

2.Values

Input Voltage [V]	Hold-Up Time [ms]	
	Load 50%	Load 100%
85	25	10
100	38	16
115	52	24
200	175	85
230	235	115
264	315	155
280	356	177
--	-	-
--	-	-

BC-12091

COSEL

Model	TEPS10F12
Item	Instantaneous Interruption Compensation
Object	+12V0.85A

Temperature 25°C
Testing Circuitry Figure A

1.Graph

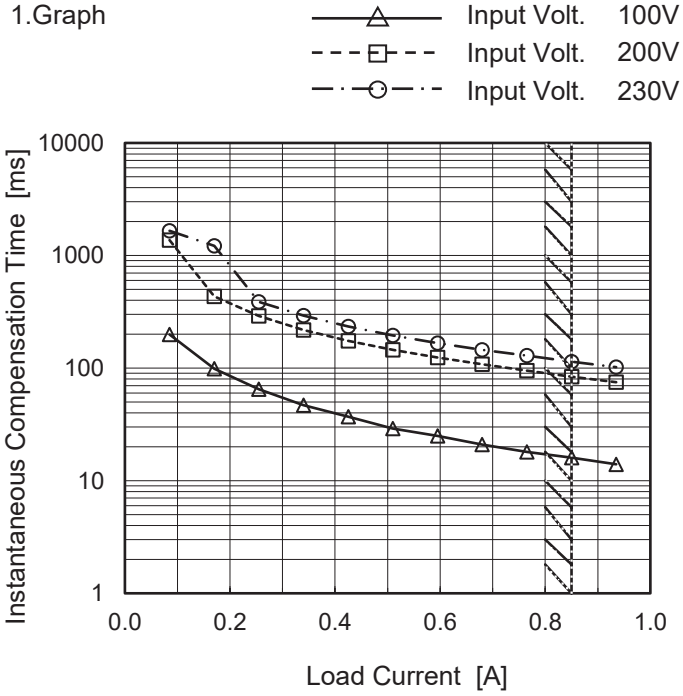

Note: Slanted line shows the range of the rated load current.

2.Values

Load Current [A]	Time [ms]		
	Input Volt. 100[V]	Input Volt. 200[V]	Input Volt. 230[V]
0.000	-	-	-
0.085	199	1370	1658
0.170	99	434	1219
0.255	65	291	389
0.340	47	218	292
0.425	37	175	235
0.510	29	145	195
0.595	25	124	167
0.680	21	108	145
0.765	18	95	129
0.850	16	84	114
0.935	14	75	102

COSEL

Model	TEPS10F12
Item	Overcurrent Protection
Object	+12V0.85A

Temperature 25°C
Testing Circuitry Figure A

1.Graph

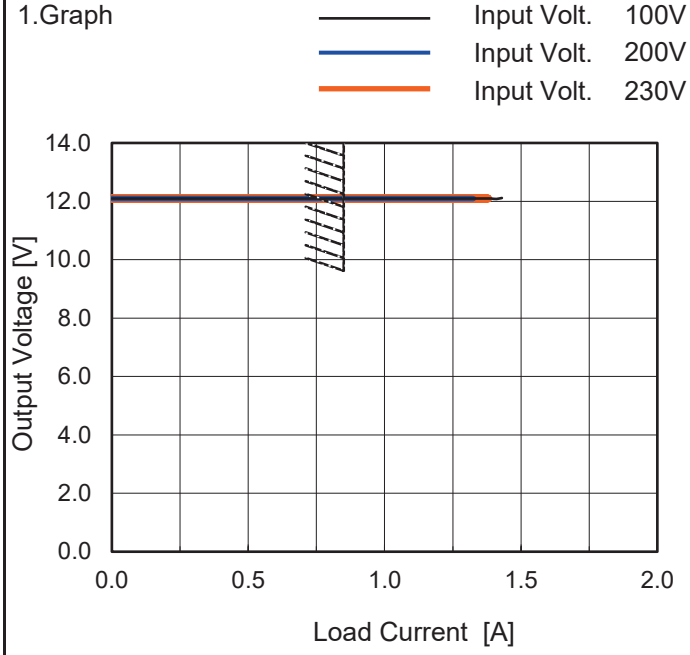

Note: Slanted line shows the range of the rated load current.

Overcurrent protection is Hiccup mode.

2.Values

Output Voltage [V]	Load Current [A]		
	Input Volt. 100[V]	Input Volt. 200[V]	Input Volt. 230[V]
12.0	1.43	1.33	1.38
11.4	-	-	-
10.8	-	-	-
9.6	-	-	-
8.4	-	-	-
7.2	-	-	-
6.0	-	-	-
4.8	-	-	-
3.6	-	-	-
2.4	-	-	-
1.2	-	-	-
0.0	-	-	-

COSEL

Model	TEPS10F12
Item	Ambient Temperature Drift
Object	+12V0.85A

Testing Circuitry Figure A

1.Values

Load 100%

Ambient Temperature[℃]	Output Voltage [V]		
	Input Volt. 100V	Input Volt. 200V	Input Volt. 230V
-20	12.093	12.094	12.094
25	12.095	12.095	12.095
60	12.079	12.080	12.079

Item	Minimum Input Voltage for Regulated Output Voltage
Object	+12V0.85A

Testing Circuitry Figure A

1.Values

Ambient Temperature[℃]	Input Voltage [V]	
	Load 50%	Load 100%
-20	37	53
25	36	49
60	32	48

Item	Overvoltage Protection
Object	+12V0.85A

Testing Circuitry Figure A

1.Values

Load 0%

Ambient Temperature[℃]	Operating Point [V]	
	Input Volt. 100V	Input Volt. 230V
-20	15.69	15.65
25	15.68	15.68
60	15.68	15.68

COSEL

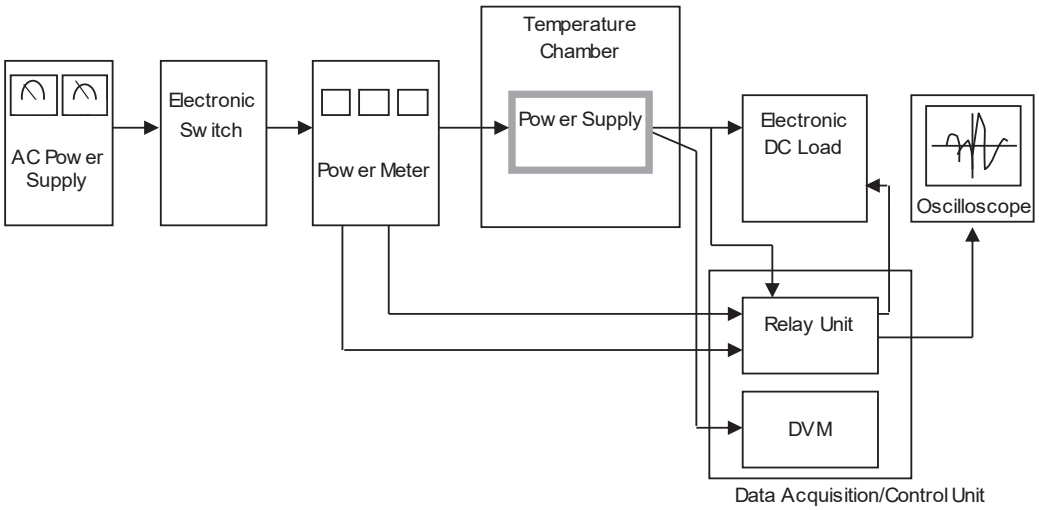

Figure A

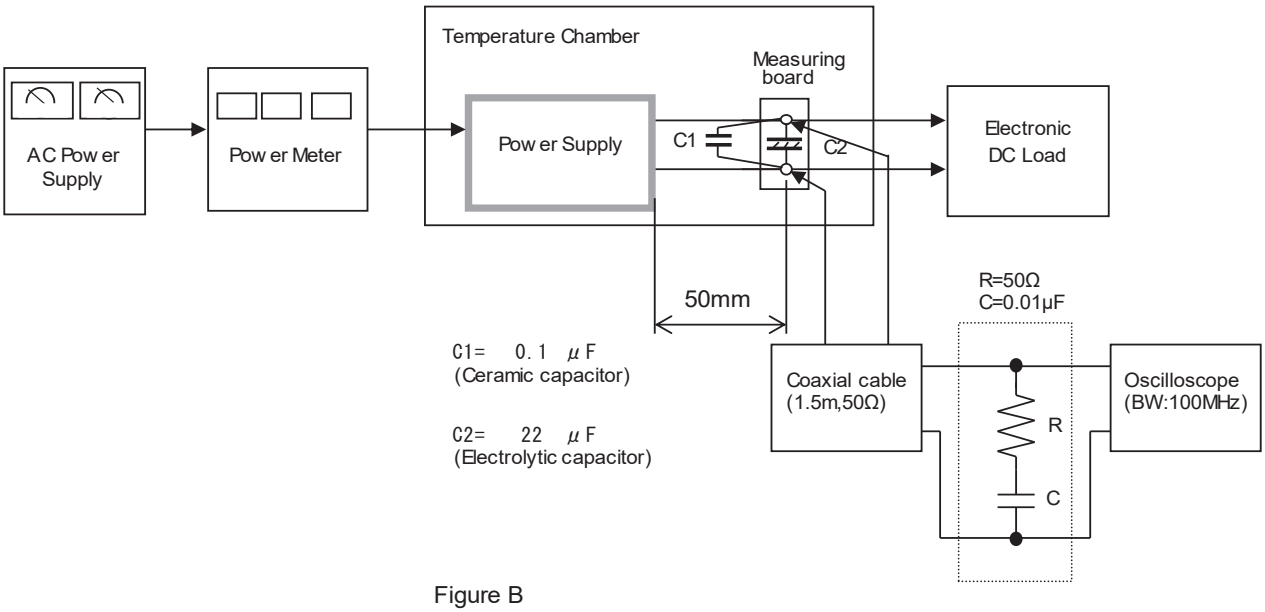

Figure B

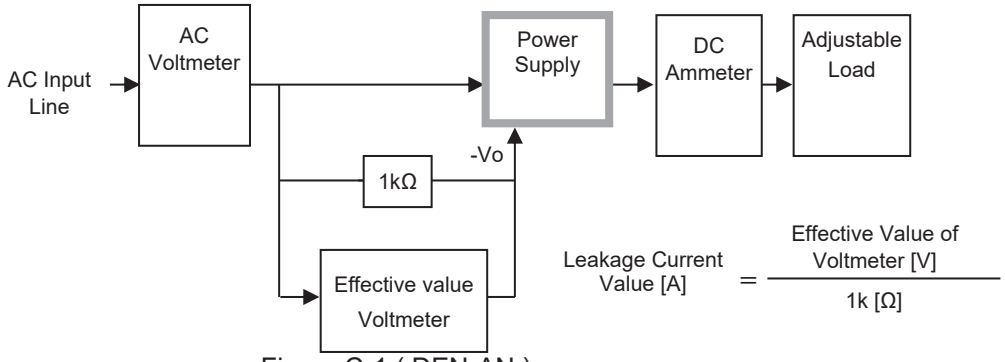

Figure C-1 (DEN-AN)

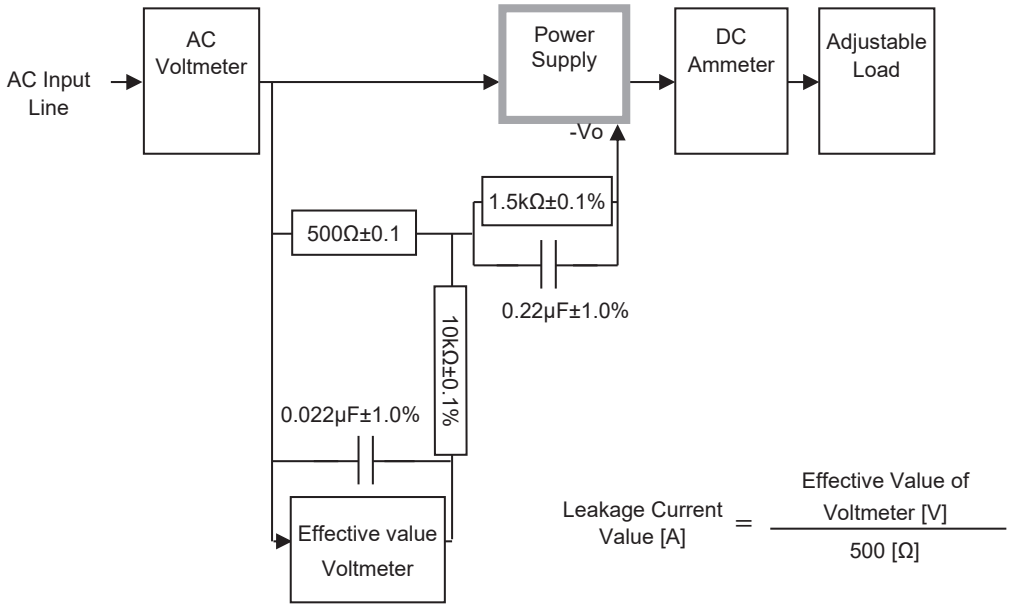

Figure C-2 (IEC62368-1 refer to IEC60990 Fig.4)

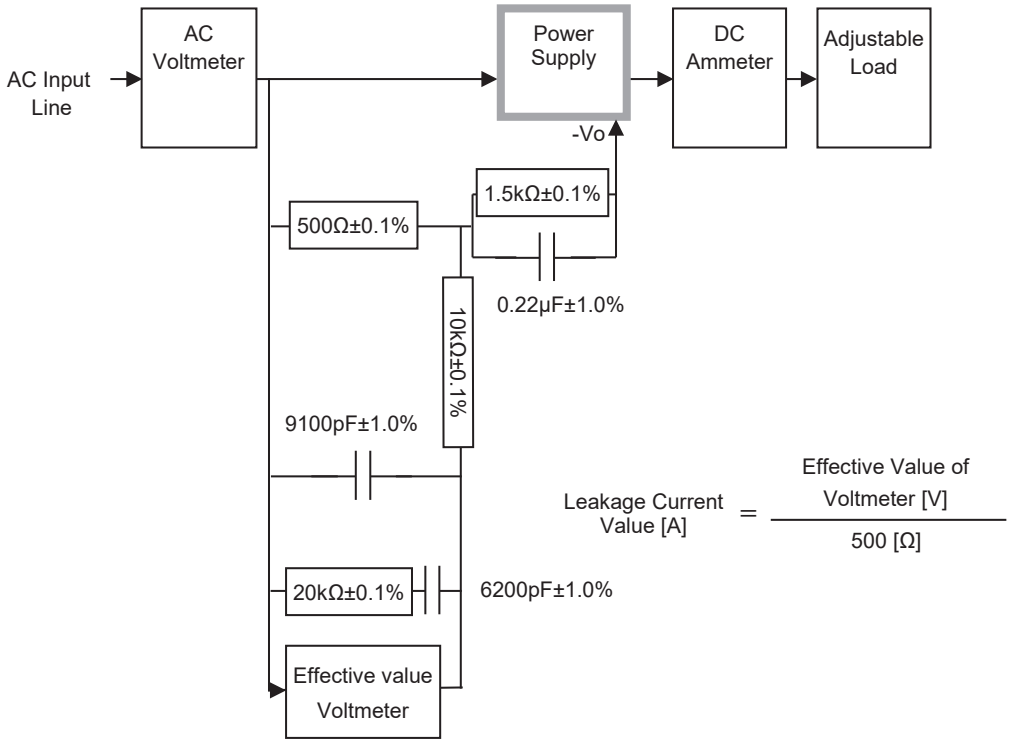

Figure C-3 (IEC62368-1 refer to IEC60990 Fig.5)