For Reference

TEST DATA OF TEPS10F24

Regulated DC Power Supply
February 28, 2025

Approved by : Tetsuro Hirata
Design Manager

Prepared by : Junichi Otsubo
Design Engineer

COSEL CO.,LTD.

COSEL

CONTENTS

1.Input Current (by Load Current) · 1
2.Efficiency (by Load Current) · 2
3.Power Factor (by Load Current) · 3
4.Inrush Current · 4
5.Leakage Current · 5
6.Line Regulation · 6
7.Load Regulation · 7
8.Ripple-Noise · 7
9.Dynamic Load Response · 8
10.Rise and Fall Time · 9
11.Hold-Up Time · 10
12.Instantaneous Interruption Compensation · · · · · · · · · · · · · · · · · 11
13.Overcurrent Protection · 12
14.Ambient Temperature Drift · 13
15.Minimum Input Voltage for Regulated Output Voltage · · · · · · · · · · 13
16.Overvoltage Protection · 13
17.Figure of Testing Circuitry · 14
(Final Page 15)

COSEL

Model	TEPS10F24
Item	Input Current (by Load Current)
Object	————————

Temperature 25°C
Testing Circuitry Figure A

1.Graph

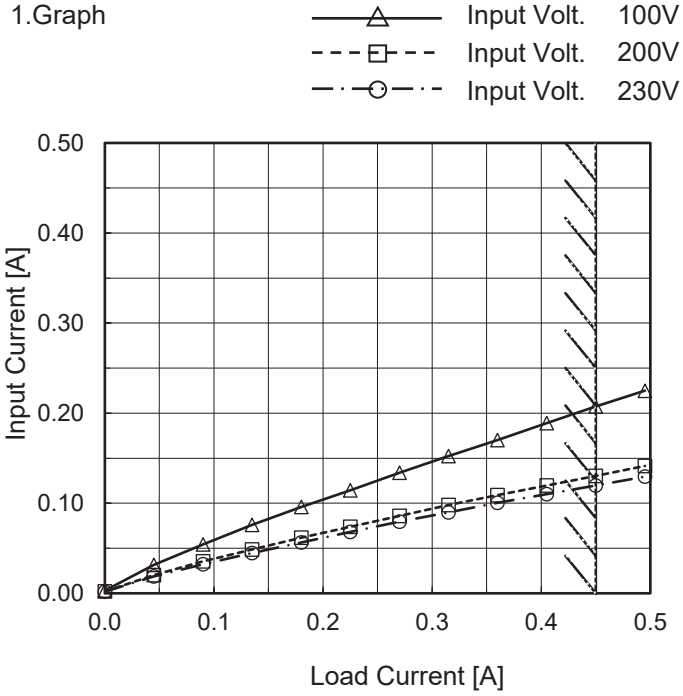

Note: Slanted line shows the range of the rated load current.

2.Values

Load Current [A]	Input Current [A]		
	Input Volt. 100[V]	Input Volt. 200[V]	Input Volt. 230[V]
0.000	0.003	0.002	0.002
0.045	0.032	0.020	0.019
0.090	0.054	0.035	0.032
0.135	0.076	0.049	0.045
0.180	0.096	0.062	0.056
0.225	0.115	0.074	0.068
0.270	0.134	0.086	0.080
0.315	0.152	0.098	0.090
0.360	0.170	0.109	0.100
0.405	0.189	0.120	0.110
0.450	0.207	0.130	0.120
0.495	0.225	0.141	0.129

BC-12093

COSEL

Model	TEPS10F24
Item	Efficiency (by Load Current)
Object	————————

Temperature 25°C
Testing Circuitry Figure A

1.Graph

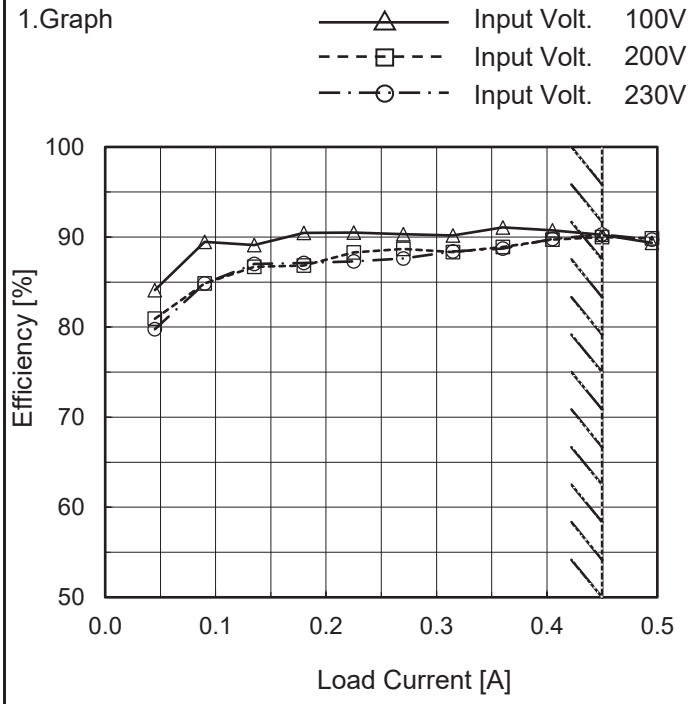

Note: Slanted line shows the range of the rated load current.

2.Values

Load Current [A]	Efficiency [%]		
	Input Volt. 100[V]	Input Volt. 200[V]	Input Volt. 230[V]
0.000	-	-	-
0.045	84.1	80.9	79.8
0.090	89.5	84.8	84.8
0.135	89.1	86.7	87.0
0.180	90.5	86.8	87.1
0.225	90.5	88.3	87.3
0.270	90.3	88.7	87.6
0.315	90.2	88.3	88.4
0.360	91.1	88.9	88.7
0.405	90.8	89.7	89.8
0.450	90.2	90.0	90.3
0.495	89.4	89.9	89.7

COSEL

Model	TEPS10F24
Item	Power Factor (by Load Current)
Object	————————

Temperature 25°C
Testing Circuitry Figure A

1.Graph

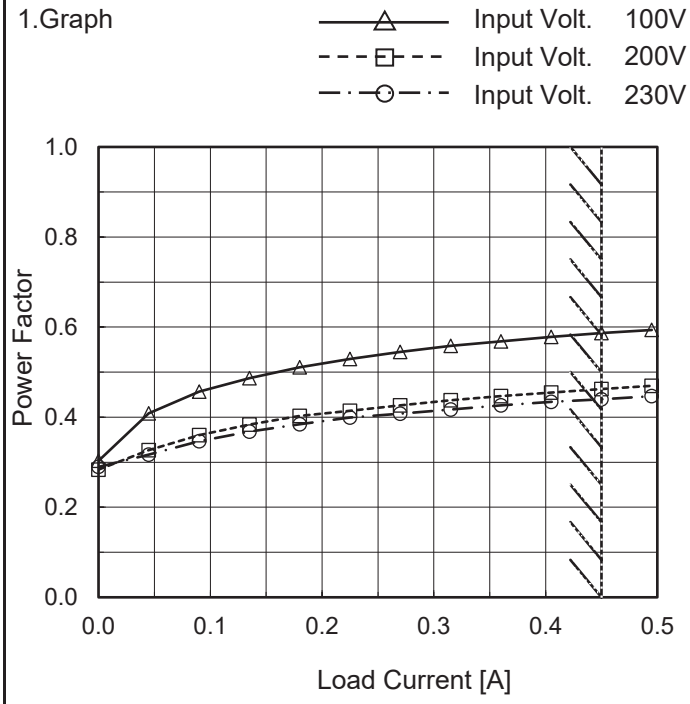

Note: Slanted line shows the range of the rated load current.

2.Values

Load Current [A]	Power Factor		
	Input Volt. 100[V]	Input Volt. 200[V]	Input Volt. 230[V]
0.000	0.303	0.284	0.289
0.045	0.409	0.326	0.316
0.090	0.457	0.360	0.346
0.135	0.487	0.384	0.368
0.180	0.511	0.403	0.385
0.225	0.529	0.414	0.399
0.270	0.545	0.427	0.408
0.315	0.558	0.438	0.417
0.360	0.569	0.447	0.426
0.405	0.578	0.455	0.434
0.450	0.587	0.462	0.440
0.495	0.594	0.470	0.447

BC-12093

COSEL

Model	TEPS10F24	
Item	Inrush Current	Temperature 25°C Testing Circuitry Figure A
Object	————————	

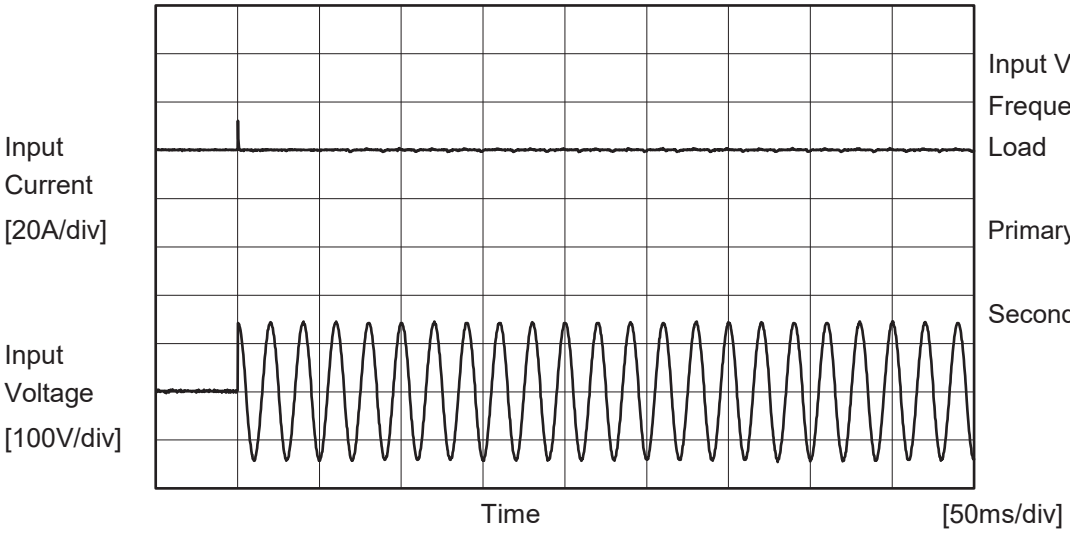

Input Voltage 100 V
Frequency 50 Hz
Load 100 %

Primary inrush current :
12.2 A
Secondary inrush current :
0.9 A

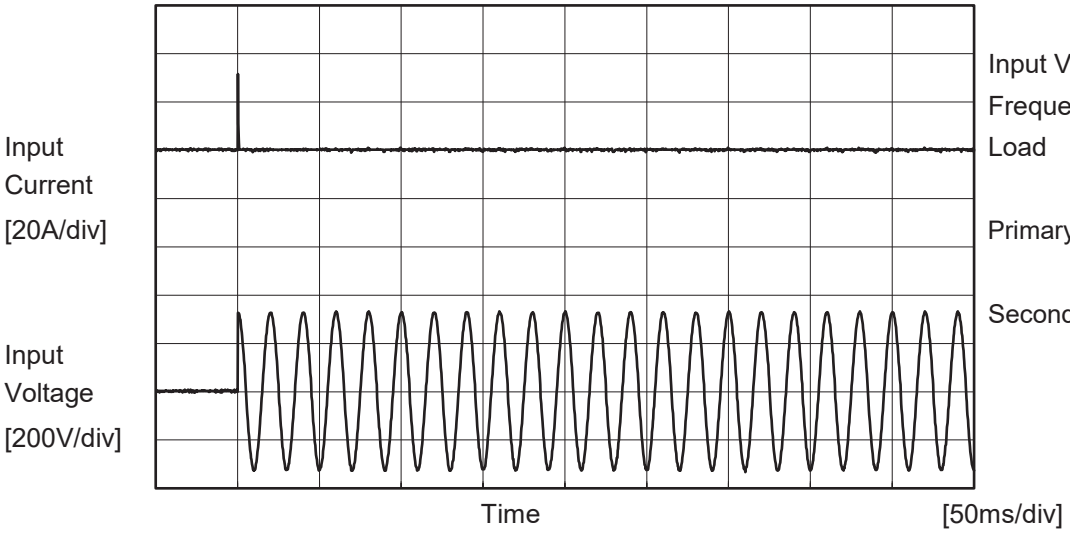

Input Voltage 230 V
Frequency 50 Hz
Load 100 %

Primary inrush current :
31.6 A
Secondary inrush current :
1.0 A

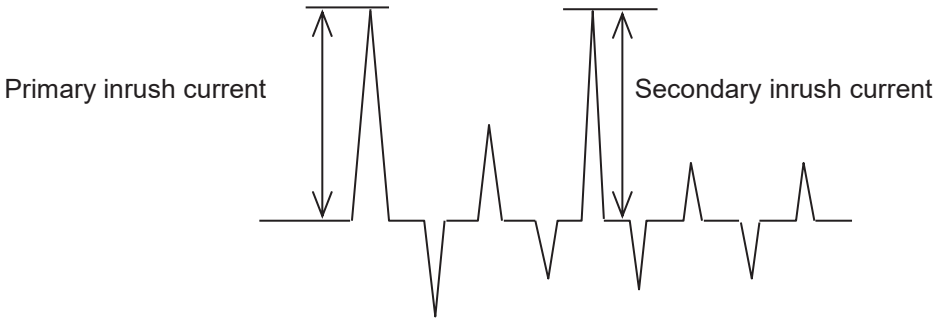

COSEL

Model	TEPS10F24	
Item	Leakage Current	Temperature 25°C Testing Circuitry Figure C
Object	————————	

1.Results

[μA]

Standards	Testing Circuitry	Measuring Method	Input Volt.			Note
			100 [V]	230 [V]	264 [V]	
DEN-AN	Figure C-1	Both phases	24	47	53	Operation
		One of phases	28	69	81	Stand by
IEC62368-1	Figure C-2	Both phases	19	44	52	Operation
		One of phases	28	69	81	Stand by
	Figure C-3	Both phases	19	45	52	Operation
		One of phases	28	69	81	Stand by

The value for "One of phases" is the reference value only.

2.Condition

Leakage current value is concluded after measuring both phases of AC input and by choosing the larger one.

COSEL

Model	TEPS10F24
Item	Line Regulation
Object	+24V0.45A

Temperature 25°C
Testing Circuitry Figure A

1.Graph

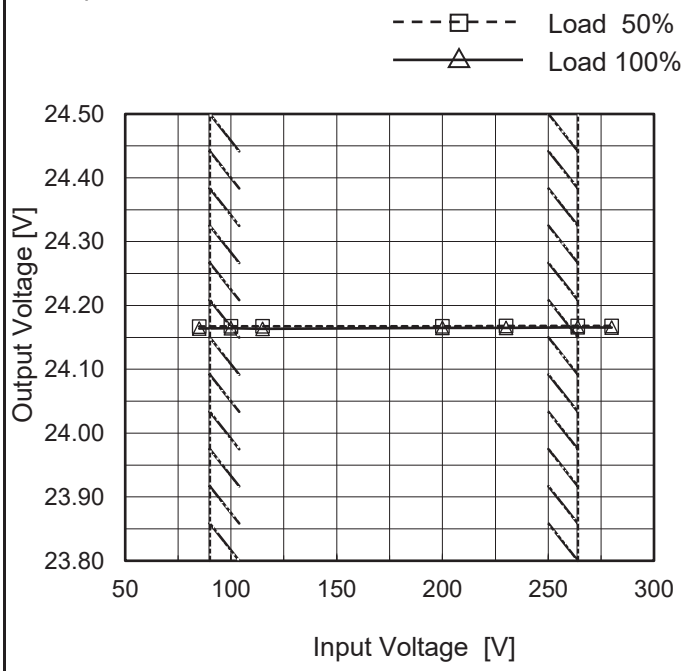

Note: Slanted line shows the range of the rated input voltage.

2.Values

Input Voltage [V]	Output Voltage [V]	
	Load 50%	Load 100%
85	24.167	24.164
100	24.168	24.164
115	24.168	24.163
200	24.168	24.165
230	24.168	24.165
264	24.168	24.166
280	24.168	24.165
--	-	-
--	-	-

COSEL

Model	TEPS10F24
Item	Load Regulation
Object	+24V0.45A

Temperature 25°C
Testing Circuitry Figure A

1.Graph

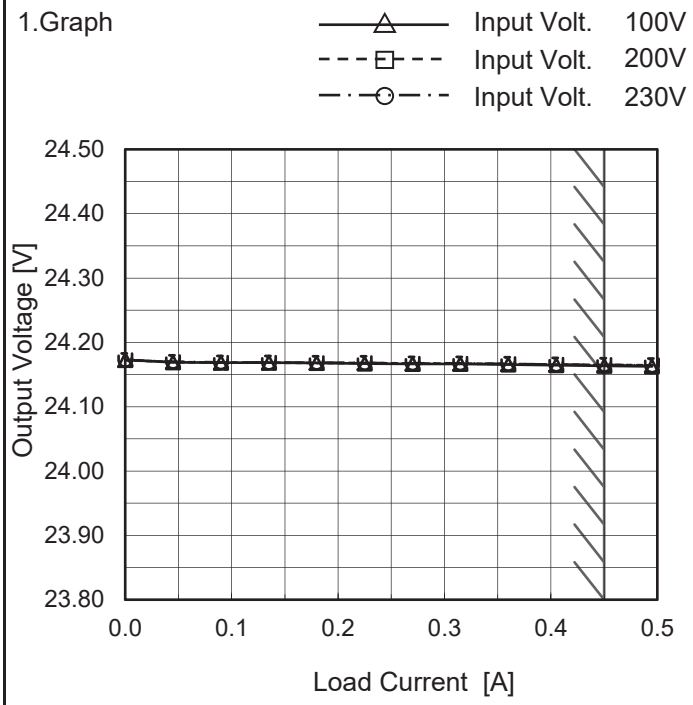

Note: Slanted line shows the range of the rated load current.

2.Values

Load Current [A]	Output Voltage [V]		
	Input Volt. 100[V]	Input Volt. 200[V]	Input Volt. 230[V]
0.000	24.173	24.172	24.173
0.045	24.169	24.169	24.170
0.090	24.169	24.169	24.169
0.135	24.169	24.169	24.169
0.180	24.168	24.168	24.168
0.225	24.167	24.168	24.168
0.270	24.166	24.167	24.168
0.315	24.166	24.167	24.167
0.360	24.165	24.166	24.166
0.405	24.164	24.165	24.165
0.450	24.164	24.165	24.165
0.495	24.163	24.164	24.164

Item	Ripple-Noise
Object	+24V0.45A

Temperature 25°C
Testing Circuitry Figure B

1.Graph

Input Voltage 230V
Load 100%

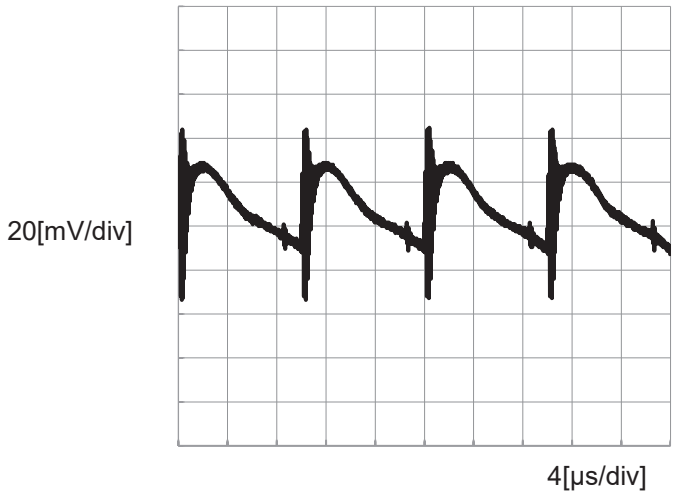

COSEL

Model	TEPS10F24	
Item	Dynamic Load Response	Temperature 25°C Testing Circuitry Figure A
Object	+24V0.45A	

Input Volt. 230 V
Cycle 1000 ms

Response. t1=t2=50µs. Typ

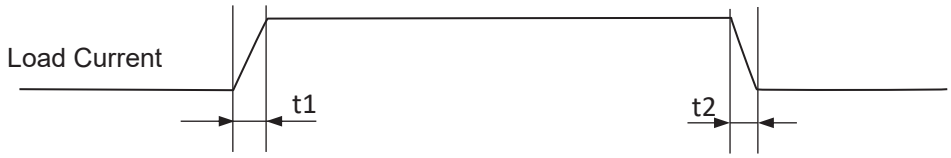

Load 0%(0A) ←→
Load 100%(0.45A)

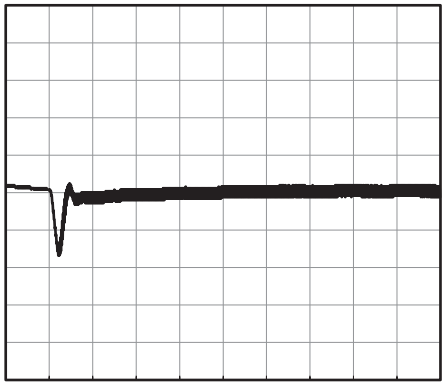

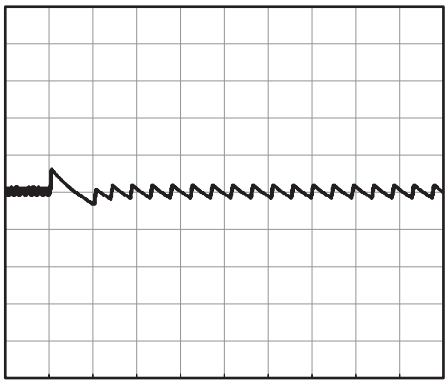

200[mV/div]

1[ms/div]

10[ms/div]

Load 50%(0.225A) ←→
Load 100%(0.45A)

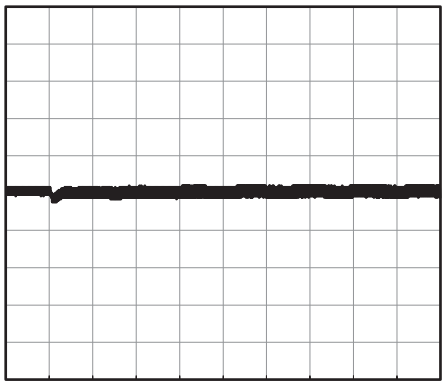

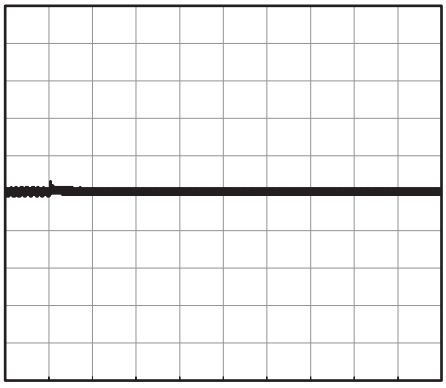

200[mV/div]

1[ms/div]

10[ms/div]

Load 0%(0A) ←→
Load 50%(0.225A)

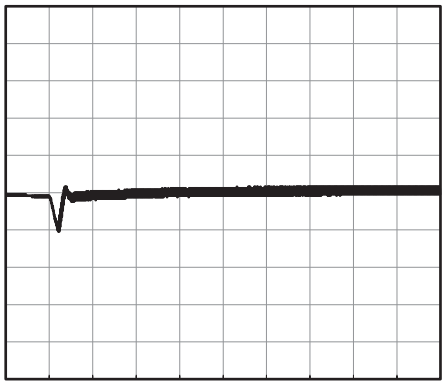

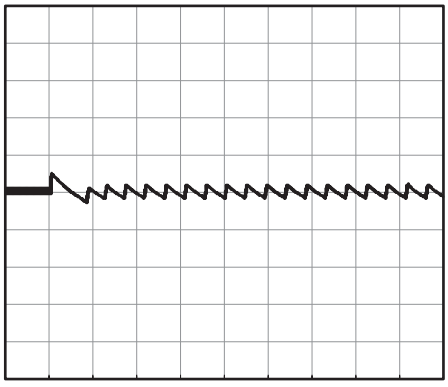

200[mV/div]

1[ms/div]

10[ms/div]

COSEL

Model	TEPS10F24	
Item	Rise and Fall Time	Temperature 25°C Testing Circuitry Figure A
Object	+24V0.45A	

1.Graph

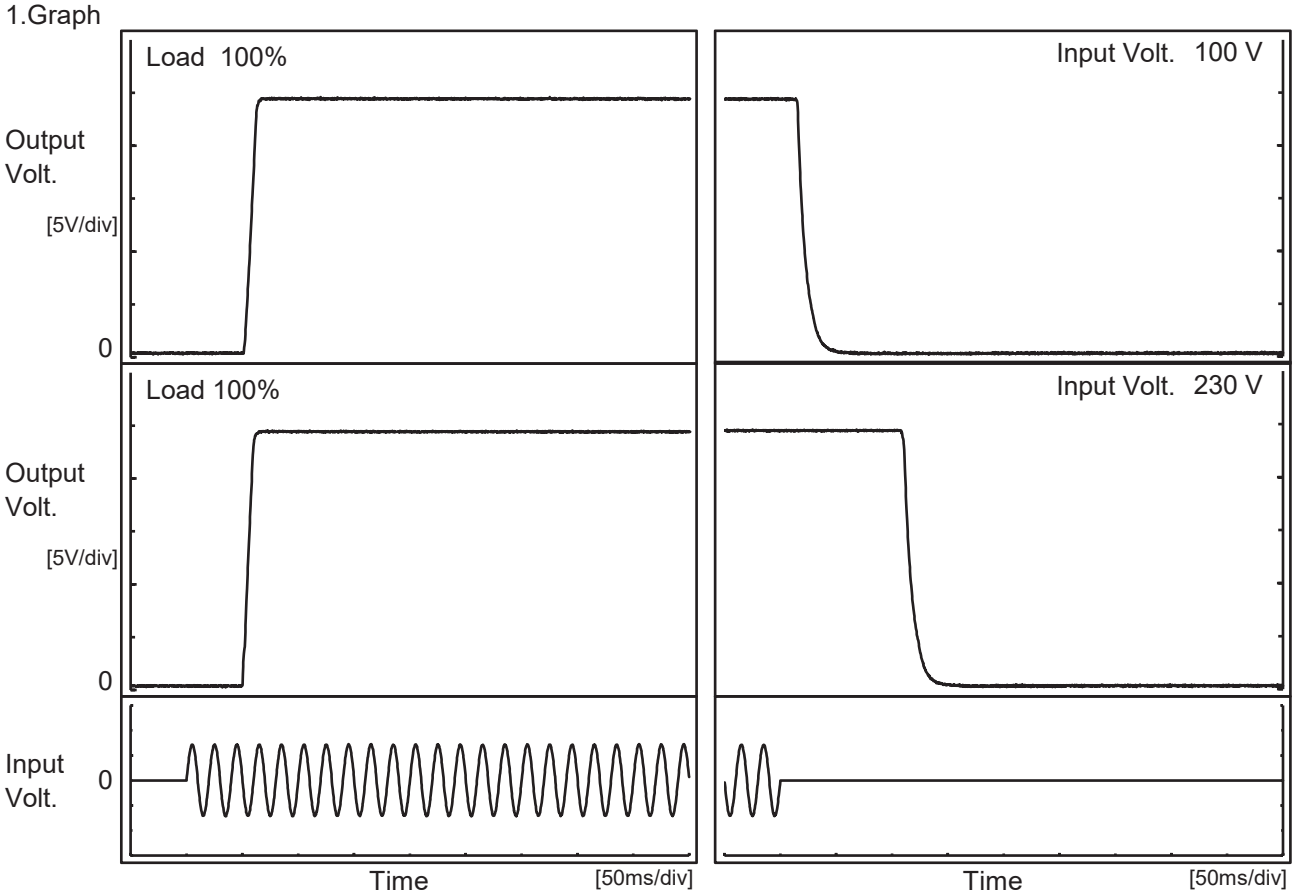

2.Values

[ms]

Input Volt. \ Time	Td	Tr	Ts	Th	Tf
100V	52.5	9.3	61.8	16.3	16.0
230V	50.5	8.8	59.3	111.3	16.0

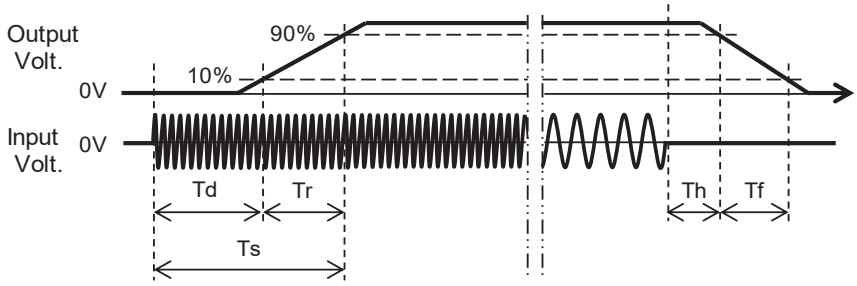

BC-12093

COSEL

Model	TEPS10F24
Item	Hold-Up Time
Object	+24V0.45A

Temperature 25°C
Testing Circuitry Figure A

1.Graph

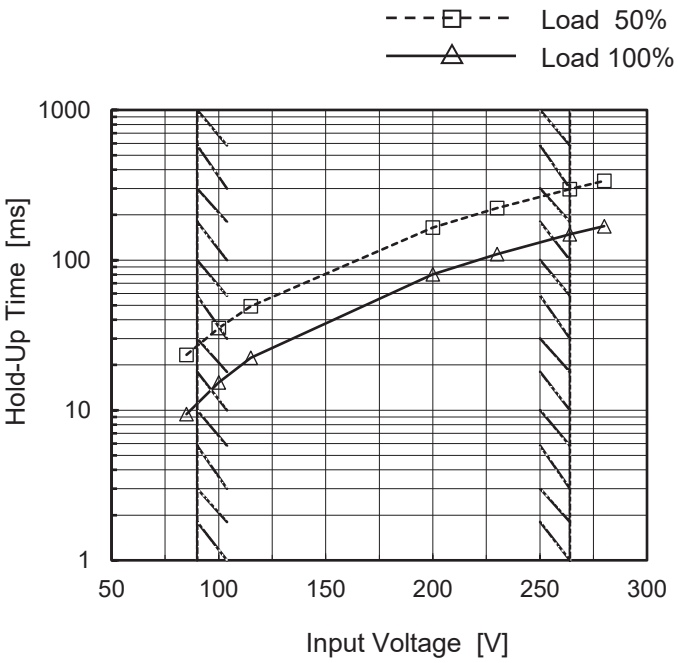

This duration covers from Shut-off of input voltage to the moment when output voltage descends to the rated range of voltage accuracy.
Note: Slanted line shows the range of the rated input voltage.

2.Values

Input Voltage [V]	Hold-Up Time [ms]	
	Load 50%	Load 100%
85	23	9
100	35	15
115	49	22
200	165	81
230	222	110
264	297	149
280	337	168
--	-	-
--	-	-

COSEL

Model	TEPS10F24
Item	Instantaneous Interruption Compensation
Object	+24V0.45A

Temperature 25°C
Testing Circuitry Figure A

1.Graph

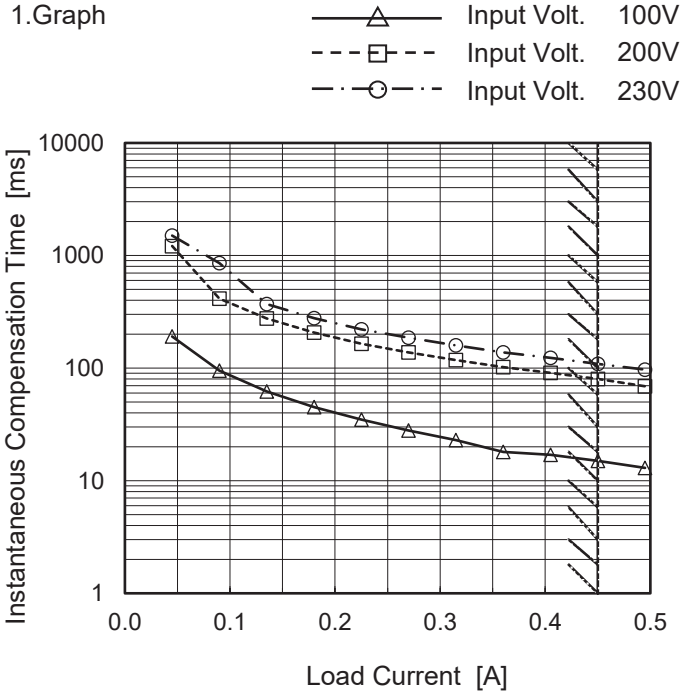

Note: Slanted line shows the range of the rated load current.

2.Values

Load Current [A]	Time [ms]		
	Input Volt. 100[V]	Input Volt. 200[V]	Input Volt. 230[V]
0.000	-	-	-
0.045	191	1215	1504
0.090	95	414	856
0.135	62	276	371
0.180	45	207	278
0.225	35	165	221
0.270	28	138	186
0.315	23	118	159
0.360	18	102	138
0.405	17	91	123
0.450	15	80	109
0.495	13	69	97

BC-12093

COSEL

Model	TEPS10F24
Item	Overcurrent Protection
Object	+24V0.45A

Temperature 25°C
Testing Circuitry Figure A

1.Graph

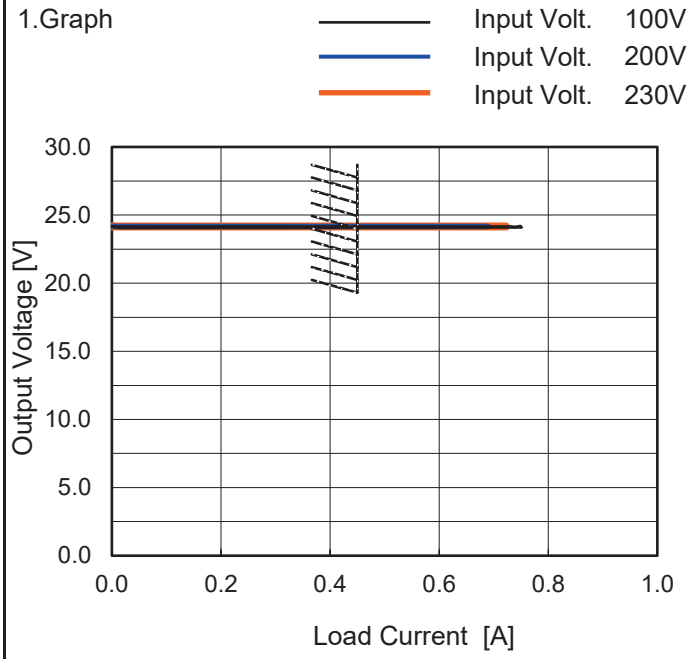

Note: Slanted line shows the range of the rated load current.

Overcurrent protection is Hiccup mode.

2.Values

Output Voltage [V]	Load Current [A]		
	Input Volt. 100[V]	Input Volt. 200[V]	Input Volt. 230[V]
24.0	0.75	0.69	0.72
22.8	-	-	-
21.6	-	-	-
19.2	-	-	-
16.8	-	-	-
14.4	-	-	-
12.0	-	-	-
9.6	-	-	-
7.2	-	-	-
4.8	-	-	-
2.4	-	-	-
0.0	-	-	-

COSEL

Model	TEPS10F24
Item	Ambient Temperature Drift
Object	+24V0.45A

Testing Circuitry Figure A

1.Values

Load 100%

Ambient Temperature[℃]	Output Voltage [V]		
	Input Volt. 100V	Input Volt. 200V	Input Volt. 230V
-20	24.115	24.116	24.117
25	24.158	24.159	24.159
60	24.159	24.161	24.161

Item	Minimum Input Voltage for Regulated Output Voltage
Object	+24V0.45A

Testing Circuitry Figure A

1.Values

Ambient Temperature[℃]	Input Voltage [V]	
	Load 50%	Load 100%
-20	35	52
25	33	51
60	33	50

Item	Overvoltage Protection
Object	+24V0.45A

Testing Circuitry Figure A

1.Values

Load 0%

Ambient Temperature[℃]	Operating Point [V]	
	Input Volt. 100V	Input Volt. 230V
-20	30.53	30.50
25	31.32	31.33
60	31.98	32.01

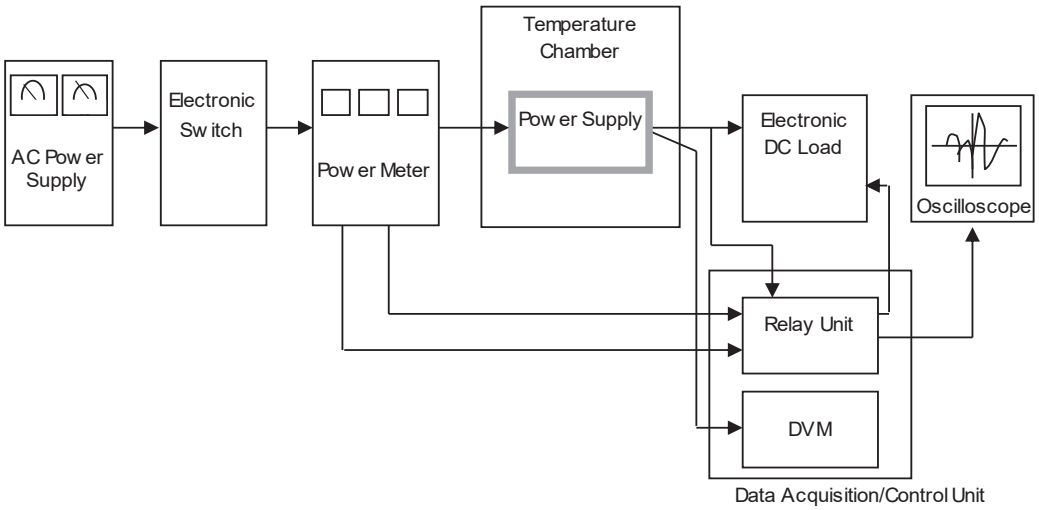

Figure A

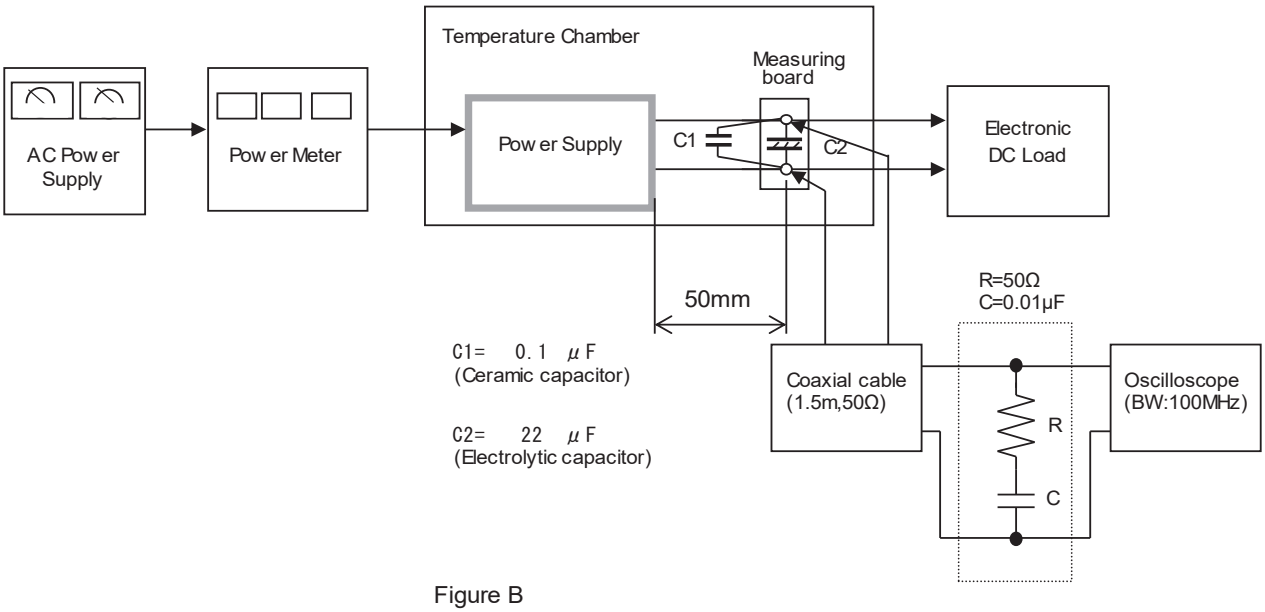

Figure B

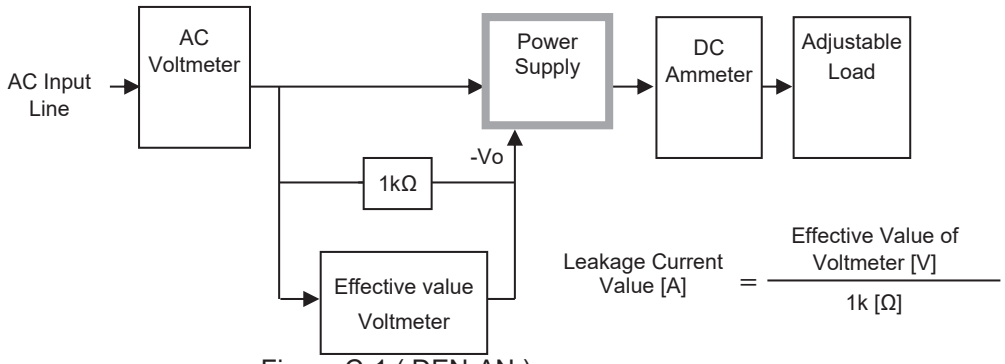

Figure C-1 (DEN-AN)

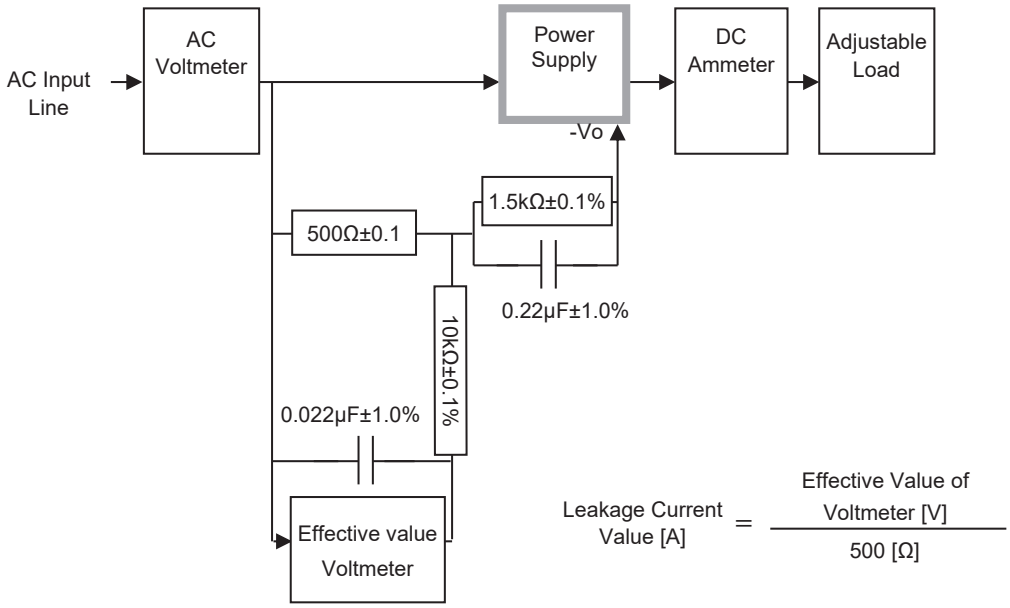

Figure C-2 (IEC62368-1 refer to IEC60990 Fig.4)

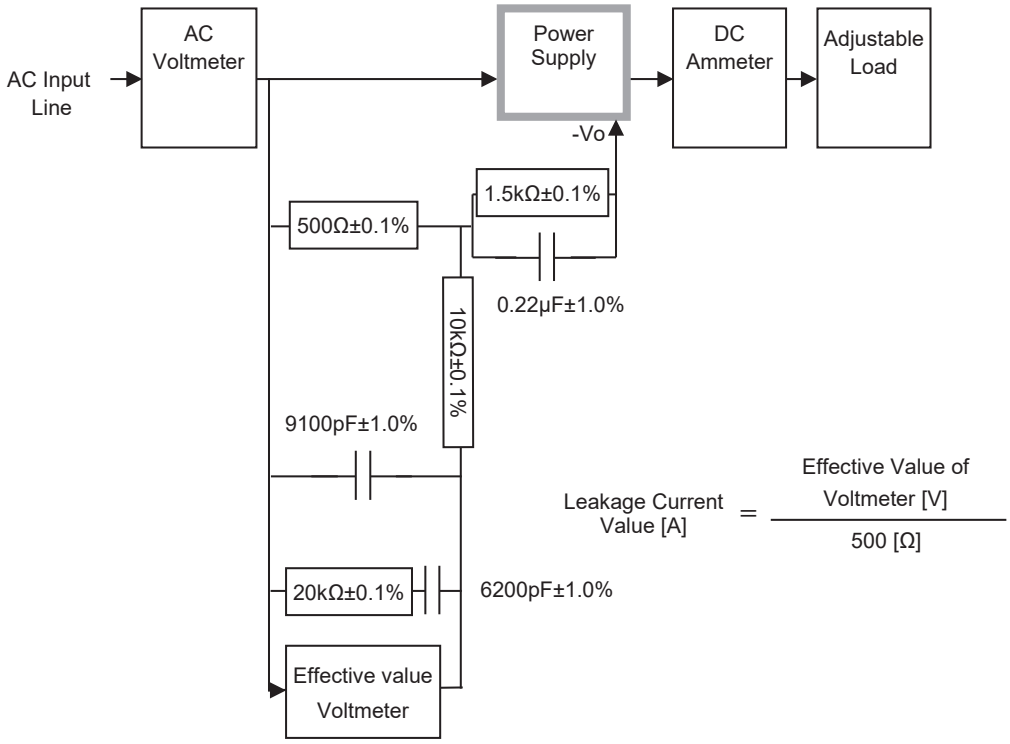

Figure C-3 (IEC62368-1 refer to IEC60990 Fig.5)