For Reference

TEST DATA OF TEPS65F24

Regulated DC Power Supply
October.3. 2023

Approved by : Satoshi Uetani
Design Manager

Prepared by : Riku Nishimura
Design Engineer

COSEL CO.,LTD.

COSEL

CONTENTS

1.Input Current (by Load Current) · 1
2.Efficiency (by Load Current) · 2
3.Power Factor (by Load Current) · 3
4.Inrush Current · 4
5.Leakage Current · 5
6.Line Regulation · 6
7.Load Regulation · 7
8.Ripple-Noise · 7
9.Dynamic Load Response · 8
10.Rise and Fall Time · 9
11.Hold-Up Time · 10
12.Instantaneous Interruption Compensation · · · · · · · · · · · · · · · · · 11
13.Overcurrent Protection · 12
14.Ambient Temperature Drift · 13
15.Minimum Input Voltage for Regulated Output Voltage · · · · · · · · · · 13
16.Overvoltage Protection · 13
17.Figure of Testing Circuitry · 14
(Final Page 15)

COSEL

Model	TEPS65F24
Item	Input Current (by Load Current)
Object	————————

Temperature 25°C
Testing Circuitry Figure A

1.Graph

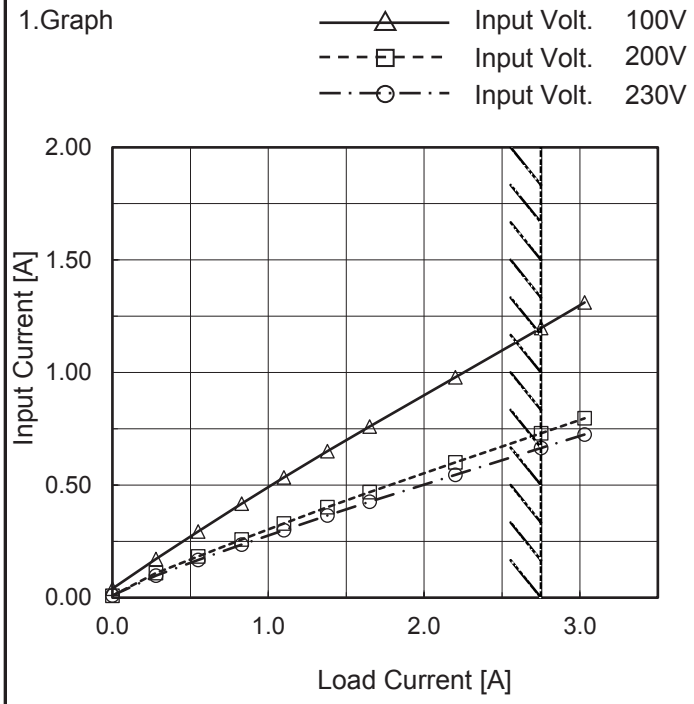

Note: Slanted line shows the range of the rated load current.

2.Values

Load Current [A]	Input Current [A]		
	Input Volt. 100[V]	Input Volt. 200[V]	Input Volt. 230[V]
0.00	0.040	0.009	0.010
0.28	0.172	0.109	0.098
0.55	0.294	0.184	0.167
0.83	0.417	0.258	0.235
1.10	0.534	0.330	0.300
1.38	0.650	0.401	0.365
1.65	0.760	0.468	0.426
2.20	0.979	0.601	0.546
2.75	1.197	0.730	0.665
3.03	1.311	0.796	0.725
--	-	-	-

BC-11943

COSEL

Model	TEPS65F24
Item	Efficiency (by Load Current)
Object	————————

Temperature 25°C
Testing Circuitry Figure A

1.Graph

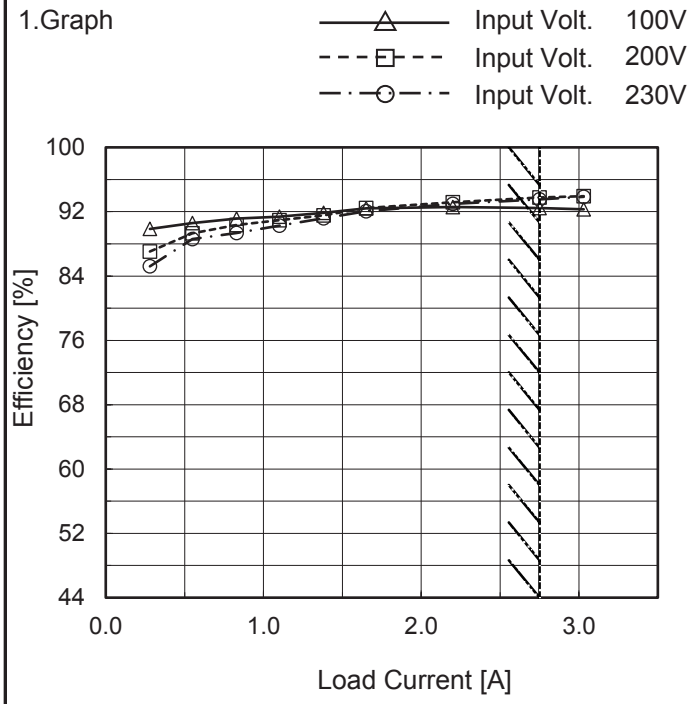

Note: Slanted line shows the range of the rated load current.

2.Values

Load Current [A]	Efficiency [%]		
	Input Volt. 100[V]	Input Volt. 200[V]	Input Volt. 230[V]
0.00	-	-	-
0.28	89.9	87.1	85.2
0.55	90.6	89.3	88.6
0.83	91.1	90.3	89.4
1.10	91.4	90.9	90.3
1.38	91.9	91.6	91.2
1.65	92.4	92.5	92.0
2.20	92.6	93.2	93.0
2.75	92.4	93.8	93.5
3.03	92.3	93.9	93.9
--	-	-	-

COSEL

Model	TEPS65F24
Item	Power Factor (by Load Current)
Object	————————

Temperature 25°C
Testing Circuitry Figure A

1.Graph

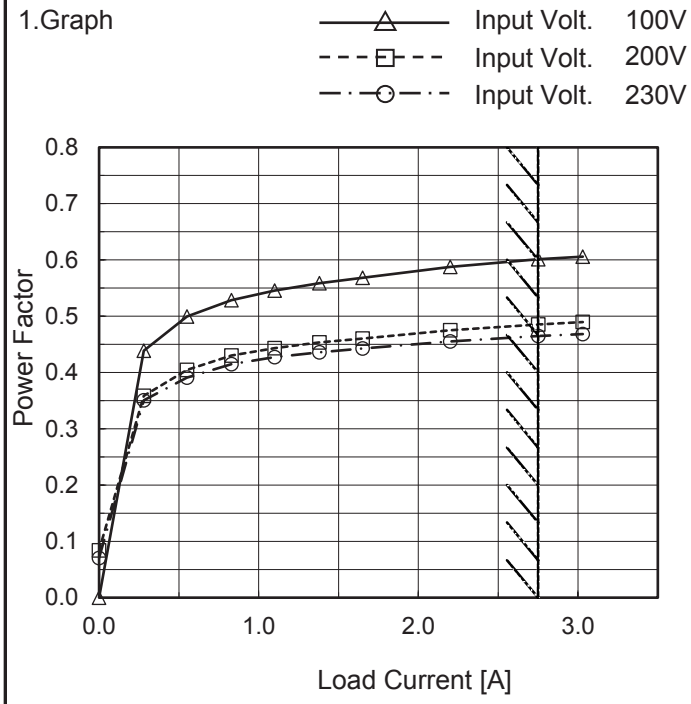

Note: Slanted line shows the range of the rated load current.

2.Values

Load Current [A]	Power Factor		
	Input Volt. 100[V]	Input Volt. 200[V]	Input Volt. 230[V]
0.00	-	0.084	0.071
0.28	0.439	0.359	0.350
0.55	0.500	0.405	0.391
0.83	0.529	0.430	0.415
1.10	0.546	0.443	0.427
1.38	0.559	0.453	0.436
1.65	0.568	0.460	0.442
2.20	0.588	0.475	0.455
2.75	0.601	0.485	0.465
3.03	0.606	0.490	0.468
--	-	-	-

COSEL

Model	TEPS65F24	
Item	Inrush Current	Temperature 25°C Testing Circuitry Figure A
Object	————————	

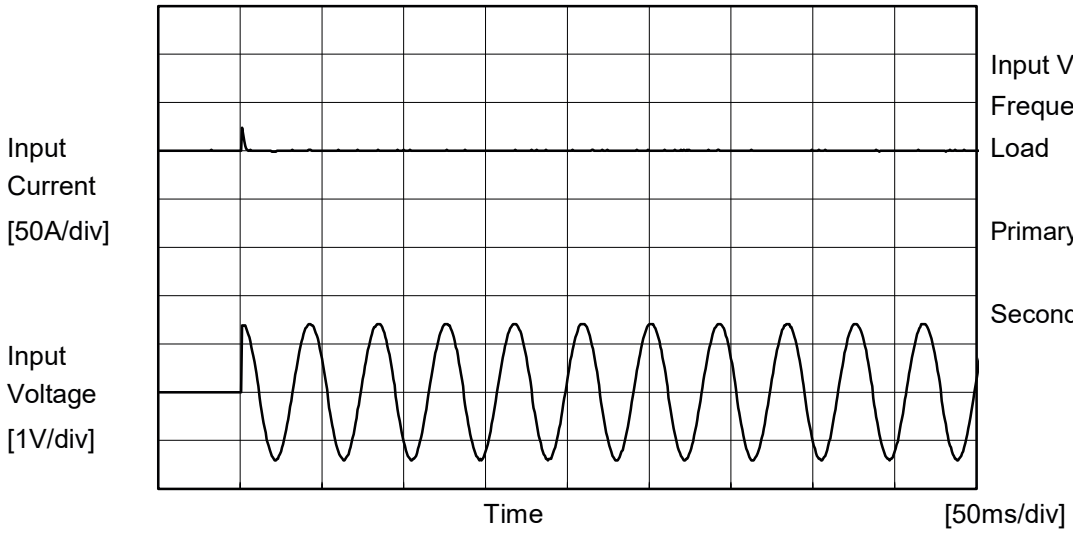

Input Voltage 100 V
Frequency 60 Hz
Load 100 %

Primary inrush current : 24.0 A
Secondary inrush current : 3.0 A

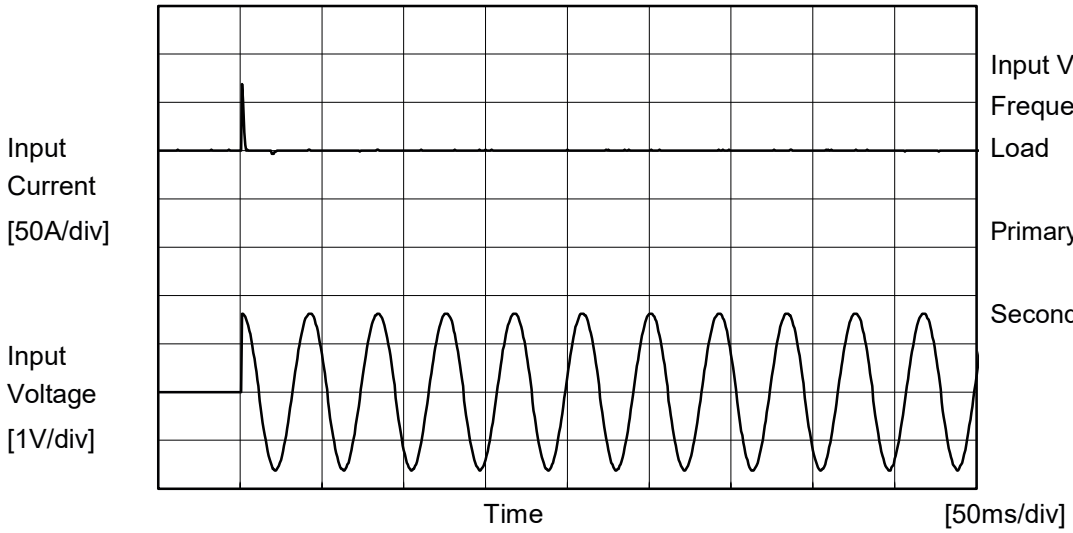

Input Voltage 230 V
Frequency 60 Hz
Load 100 %

Primary inrush current : 69.0 A
Secondary inrush current : 3.0 A

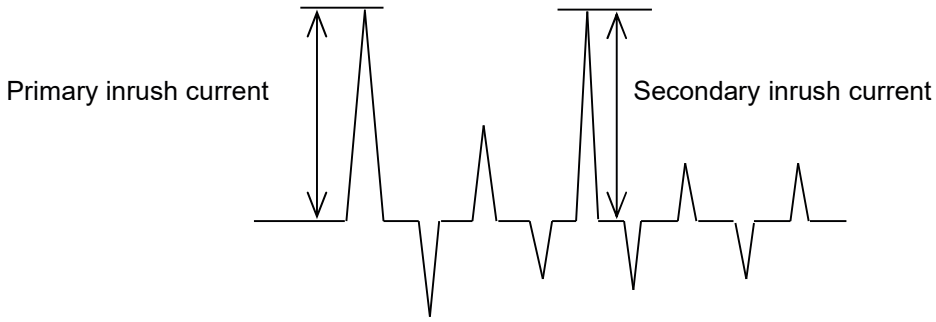

COSEL

Model	TEPS65F24	
Item	Leakage Current	Temperature 25°C Testing Circuitry Figure C
Object	————————————	

1.Results

[mA]

Standards	Testing Circuitry	Measuring Method	Input Volt.			Note
			100 [V]	230 [V]	264 [V]	
DEN-AN	Figure C-1	Both phases	0.03	0.07	0.08	Operation
		One of phases	0.04	0.11	0.12	Stand by
IEC62368-1	Figure C-2	Both phases	0.03	0.07	0.08	Operation
		One of phases	0.04	0.10	0.12	Stand by
	Figure C-3	Both phases	0.03	0.07	0.08	Operation
		One of phases	0.04	0.10	0.12	Stand by

The value for "One of phases" is the reference value only.

2.Condition

Leakage current value is concluded after measuring both phases of AC input and by choosing the larger one.

COSEL

Model	TEPS65F24
Item	Line Regulation
Object	+24V2.75A

Temperature 25°C
Testing Circuitry Figure A

1.Graph

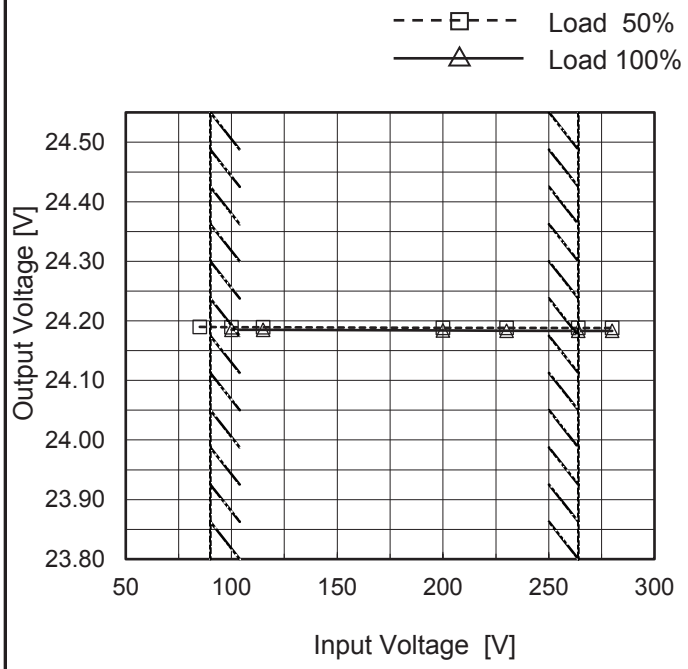

Note: Slanted line shows the range of the rated input voltage.

2.Values

Input Voltage [V]	Output Voltage [V]	
	Load 50%	Load 100%
85	24.190	-
100	24.189	24.185
115	24.189	24.185
200	24.188	24.184
230	24.188	24.184
264	24.188	24.183
280	24.188	24.183
--	-	-
--	-	-

BC-11943

COSEL

Model	TEPS65F24
Item	Load Regulation
Object	+24V2.75A

Temperature 25°C
Testing Circuitry Figure A

1.Graph

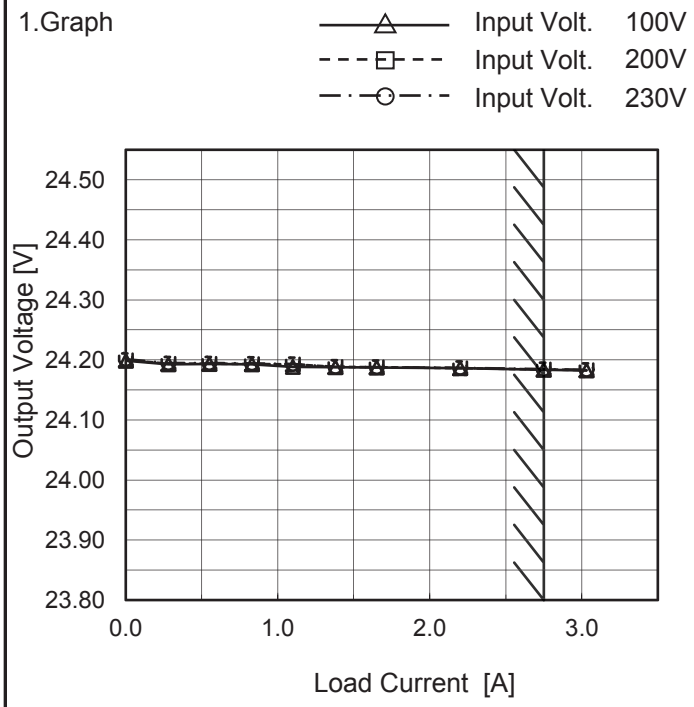

Note: Slanted line shows the range of the rated load current.

2.Values

Load Current [A]	Output Voltage [V] Input Volt. 100[V]	Input Volt. 200[V]	Input Volt. 230[V]
0.00	24.199	24.200	24.201
0.28	24.193	24.194	24.195
0.55	24.193	24.194	24.195
0.83	24.193	24.193	24.194
1.10	24.189	24.193	24.193
1.38	24.188	24.188	24.189
1.65	24.187	24.188	24.188
2.20	24.186	24.186	24.187
2.75	24.184	24.184	24.185
3.03	24.182	24.183	24.184
--	--	--	--

Item	Ripple-Noise
Object	+24V2.75A

Temperature 25°C
Testing Circuitry Figure B

1.Graph

Input Voltage 230V
Load 100%

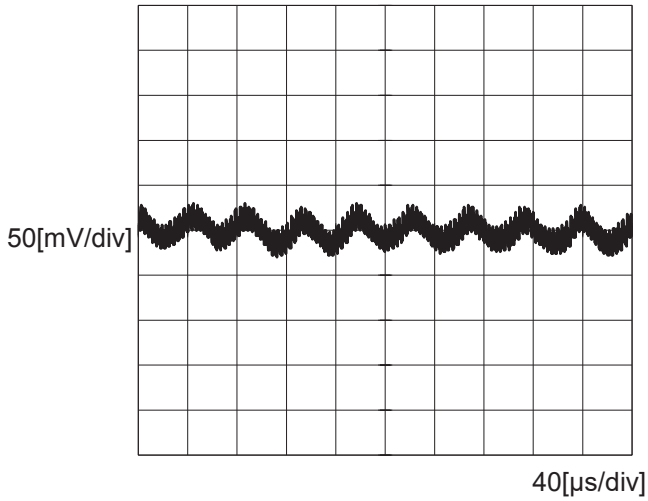

BC-11943

COSEL

Model	TEPS65F24	
Item	Dynamic Load Response	Temperature 25°C Testing Circuitry Figure A
Object	+24V2.75A	

Input Volt. 230 V

Cycle 1000 ms

Response. t1=t2=50µs. Typ

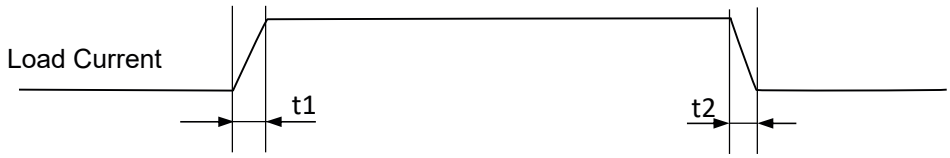

Load 0%(0A) ←→
Load 100%(2.75A)

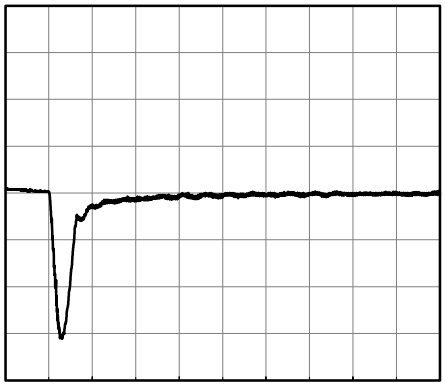

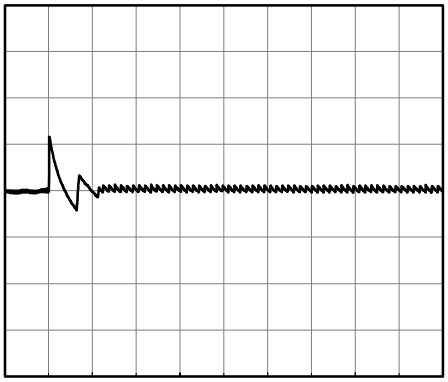

500[mV/div]

1[ms/div]

20[ms/div]

Load 50%(1.375A) ←→
Load 100%(2.75A)

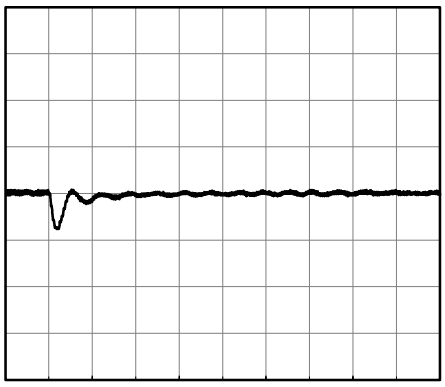

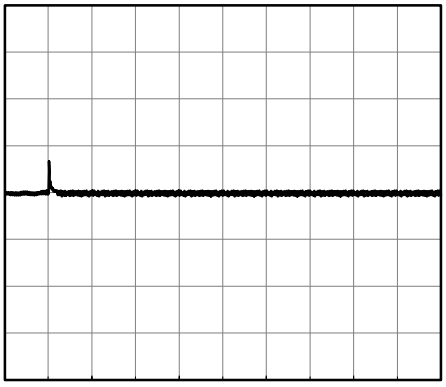

500[mV/div]

1[ms/div]

20[ms/div]

Load 0%(0A) ←→
Load 50%(1.375A)

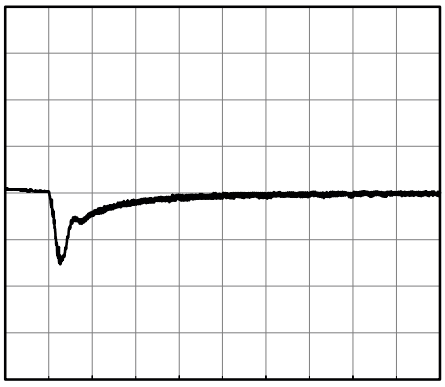

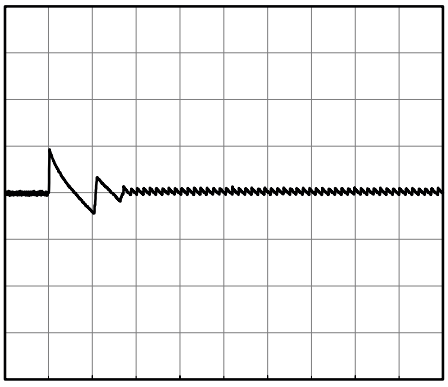

500[mV/div]

1[ms/div]

20[ms/div]

COSEL

Model	TEPS65F24	
Item	Rise and Fall Time	Temperature 25°C Testing Circuitry Figure A
Object	+24V2.75A	

1.Graph

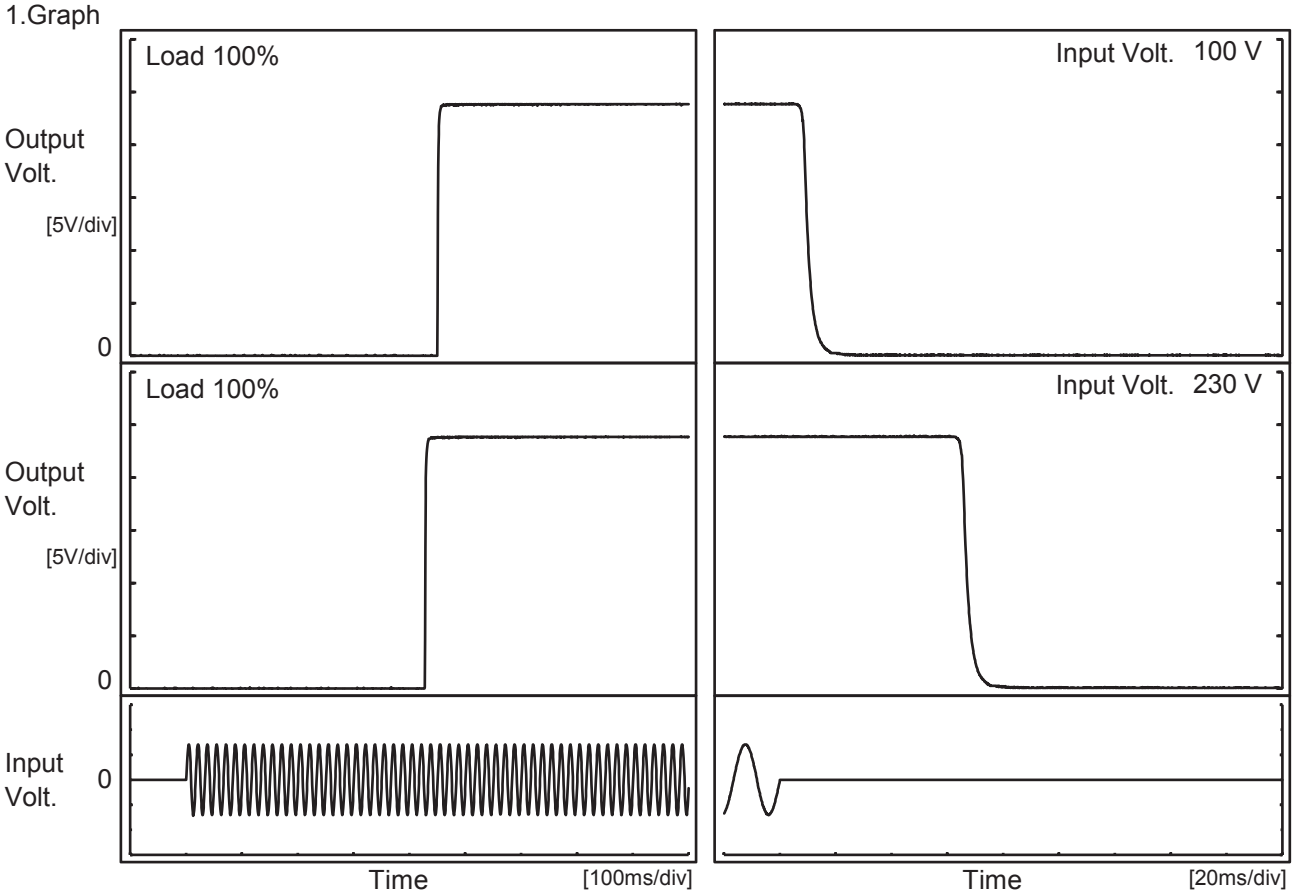

2.Values

[ms]

Input Volt. \ Time	Td	Tr	Ts	Th	Tf
100 V	452.5	3.5	456.0	8.2	5.2
230 V	428.5	3.5	432.0	65.1	5.2

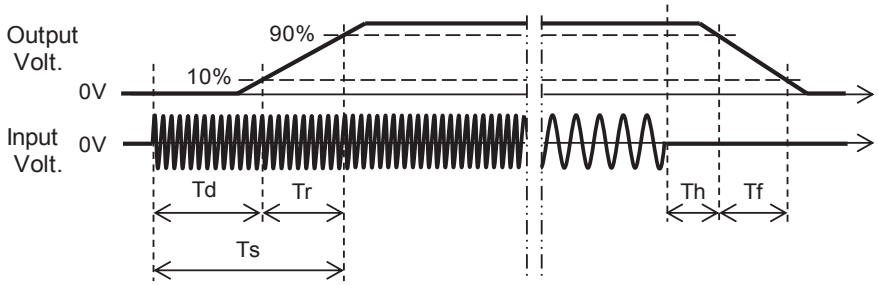

BC-11943

COSEL

Model	TEPS65F24
Item	Hold-Up Time
Object	+24V2.75A

Temperature 25°C
Testing Circuitry Figure A

1.Graph

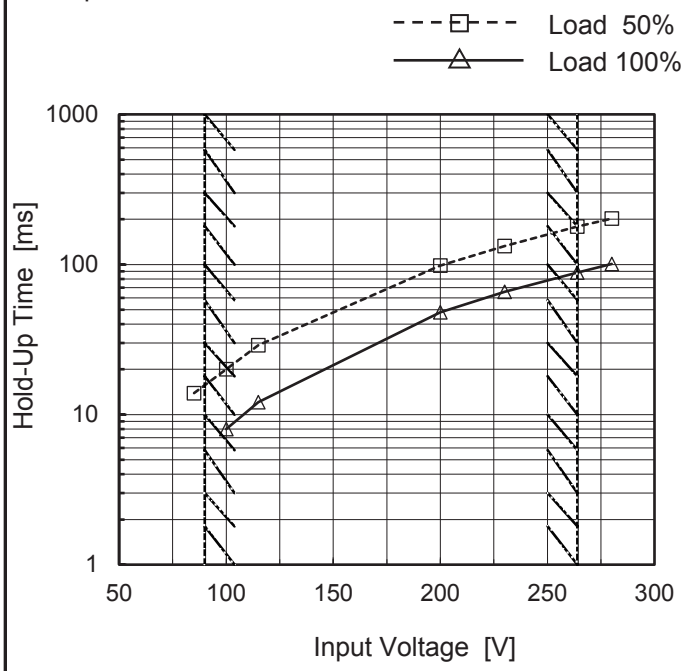

This duration covers from Shut-off of input voltage to the moment when output voltage descends to the rated range of voltage accuracy.
Note: Slanted line shows the range of the rated input voltage.

2.Values

Input Voltage [V]	Hold-Up Time [ms]	
	Load 50%	Load 100%
85	14	-
100	20	8
115	29	12
200	98	48
230	132	66
264	179	88
280	202	101
--	-	-
--	-	-

BC-11943

COSEL

Model	TEPS65F24
Item	Instantaneous Interruption Compensation
Object	+24V2.75A

Temperature 25°C
Testing Circuitry Figure A

1.Graph

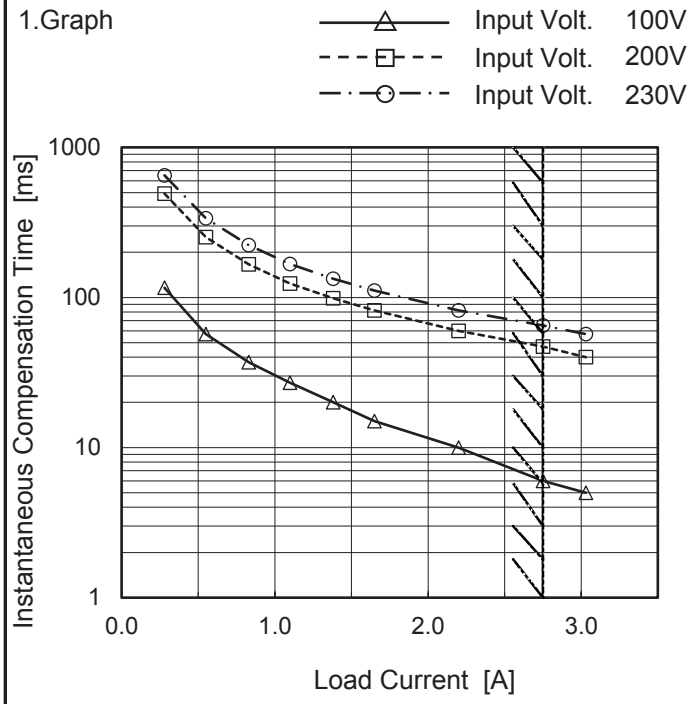

Note: Slanted line shows the range of the rated load current.

2.Values

Load Current [A]	Time [ms]		
	Input Volt. 100[V]	Input Volt. 200[V]	Input Volt. 230[V]
0.00	-	-	-
0.28	116	492	651
0.55	57	252	337
0.83	37	166	223
1.10	27	124	167
1.38	20	99	133
1.65	15	82	111
2.20	10	60	82
2.75	6	47	65
3.03	5	40	57
--	-	-	-

COSEL

Model	TEPS65F24
Item	Overcurrent Protection
Object	+24V2.75A

Temperature 25°C
Testing Circuitry Figure A

1.Graph

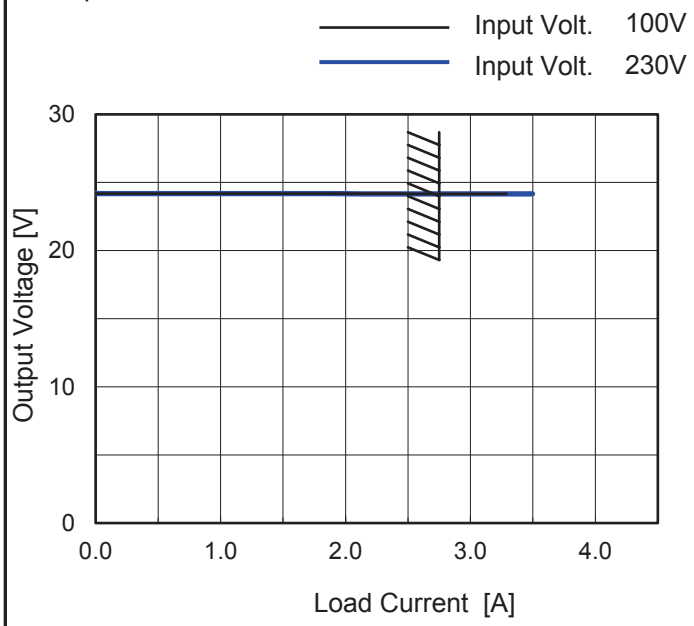

Note: Slanted line shows the range of the rated load current.

Overcurrent protection is Hiccup mode.

2.Values

Output Voltage [V]	Load Current [A]	
	Input Volt. 100[V]	Input Volt. 230[V]
24.0	3.29	3.50
22.8	-	-
21.6	-	-
19.2	-	-
16.8	-	-
14.4	-	-
12.0	-	-
9.6	-	-
7.2	-	-
4.8	-	-
2.4	-	-
0.0	-	-

COSEL

Model	TEPS65F24
Item	Ambient Temperature Drift
Object	+24V2.75A

Testing Circuitry Figure A

1.Values

Load 100%

Ambient Temperature[℃]	Output Voltage [V]		
	Input Volt. 100V	Input Volt. 200V	Input Volt. 230V
-10	24.222	24.221	24.221
25	24.203	24.202	24.201
50	24.167	24.164	24.163

Item	Minimum Input Voltage for Regulated Output Voltage
Object	+24V2.75A

Testing Circuitry Figure A

1.Values

Ambient Temperature[℃]	Input Voltage [V]	
	Load 50%	Load 100%
-10	63	64
25	63	65
50	64	65

Item	Overvoltage Protection
Object	+24V2.75A

Testing Circuitry Figure A

1.Values

Load 0%

Ambient Temperature[℃]	Operating Point [V]	
	Input Volt. 100V	Input Volt. 230V
-10	29.26	29.26
25	29.26	29.26
50	29.19	29.19

COSEL

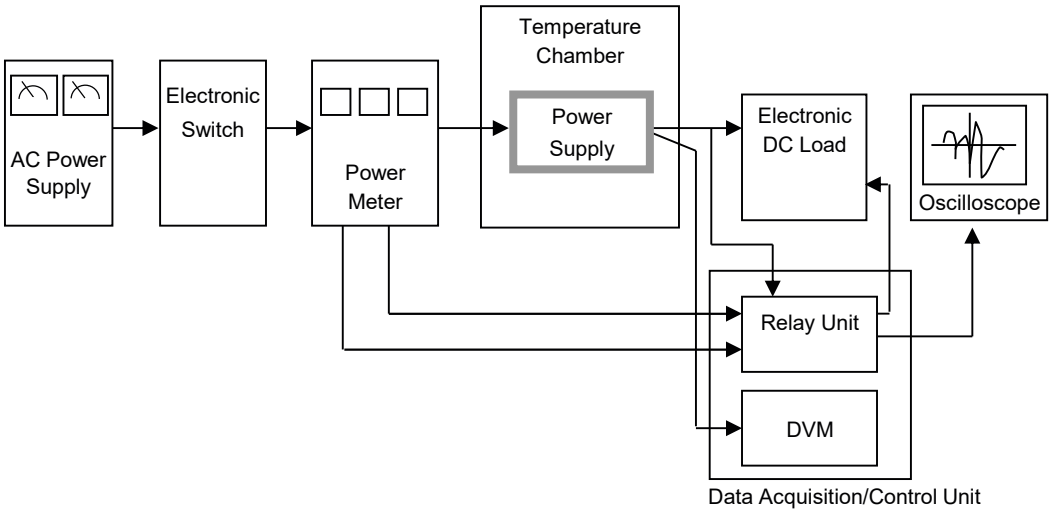

Figure A

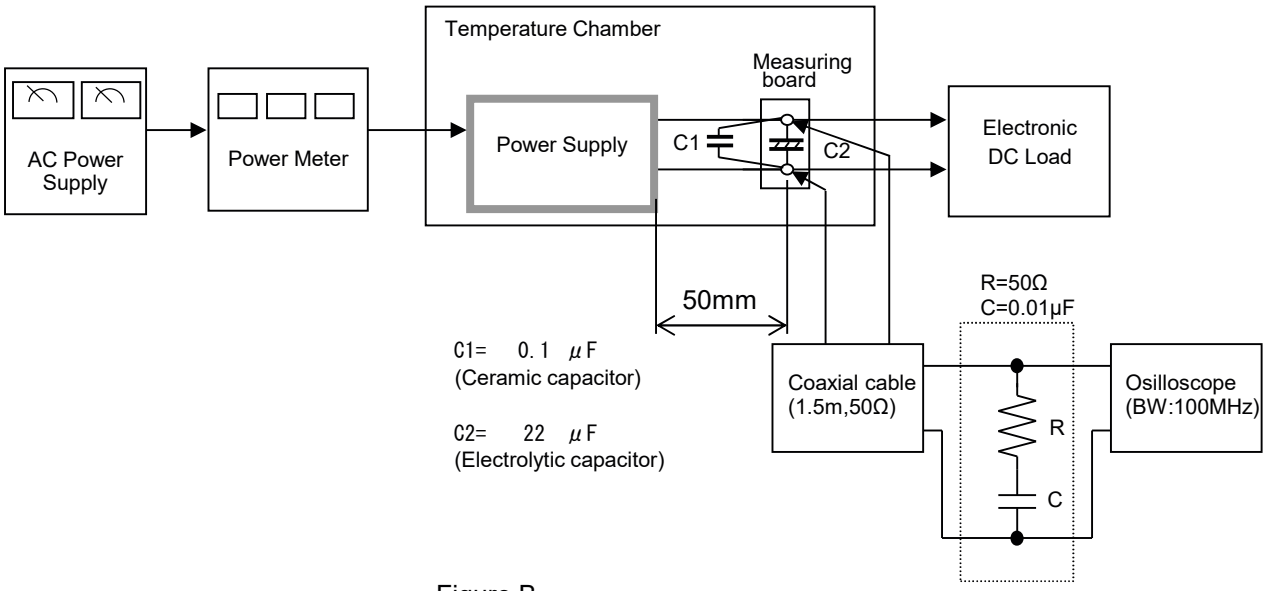

Figure B

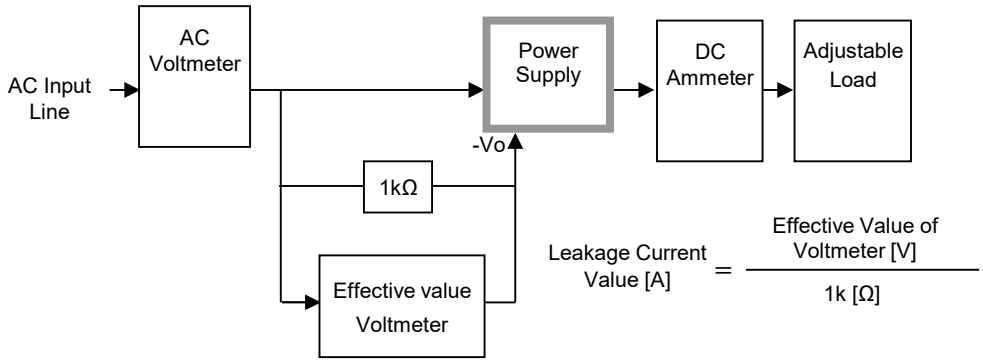

Figure C-1 (DEN-AN)

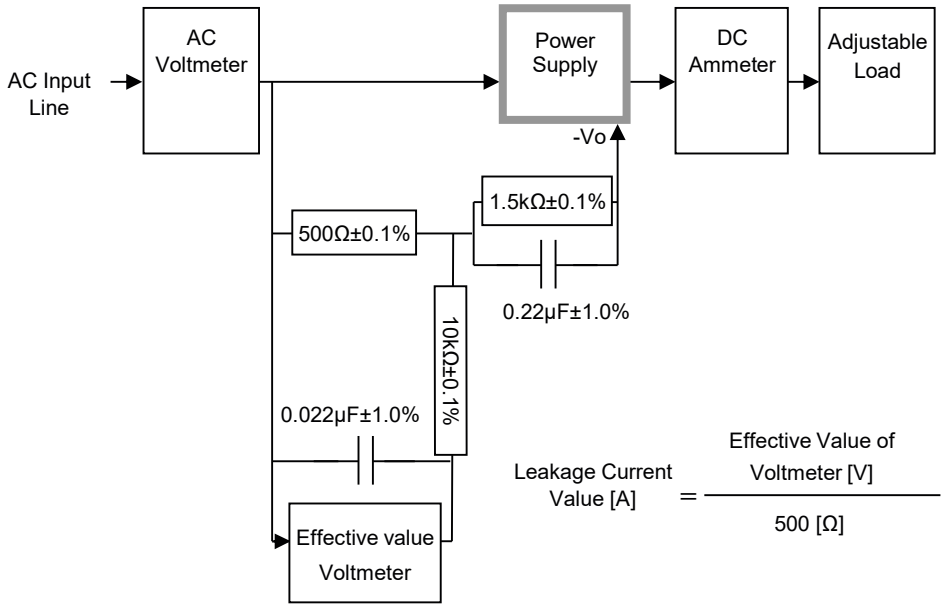

Figure C-2 (IEC62368-1 refer to IEC60990 Fig.4)

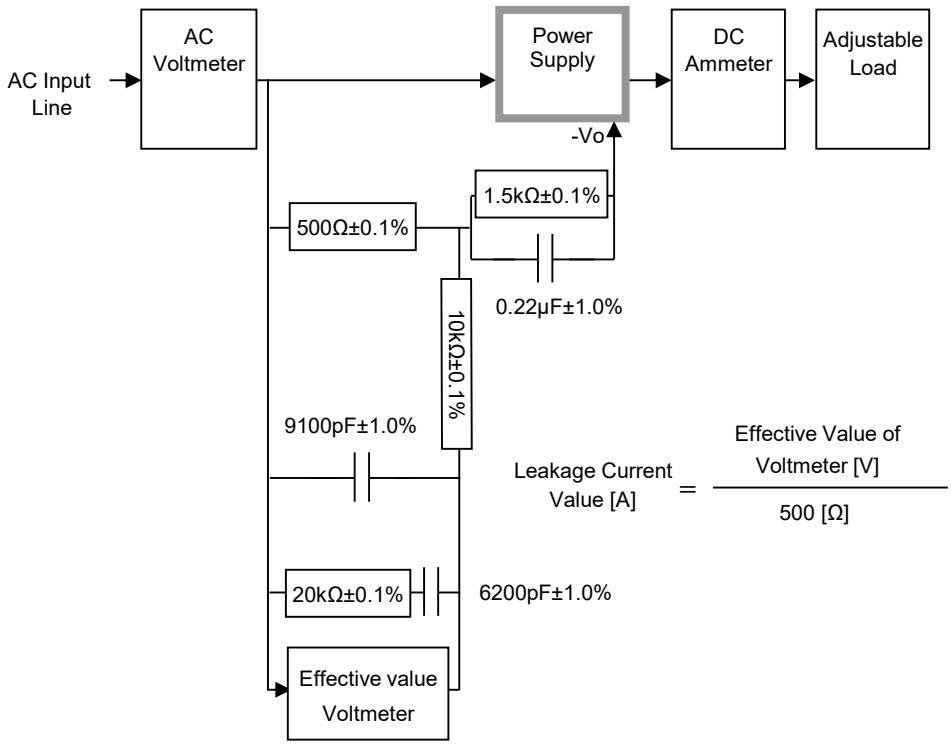

Figure C-3 (IEC62368-1 refer to IEC60990 Fig.5)