COSEL

For Reference

TEST DATA OF UMA120F-48-Y

Regulated DC Power Supply
November 13, 2024

Approved by : Takashi Kajii
Design Manager

Prepared by : Kyosuke Kurata
Design Engineer

COSEL CO.,LTD.

COSEL

CONTENTS

1.Input Current (by Load Current) · 1
2.Efficiency (by Load Current) · 2
3.Power Factor (by Load Current) · 3
4.Inrush Current · 4
5.Leakage Current · 5
6.Line Regulation · 6
7.Load Regulation · 7
8.Ripple-Noise · 7
9.Dynamic Load Response · 8
10.Rise and Fall Time · 9
11.Hold-Up Time · 10
12.Instantaneous Interruption Compensation · · · · · · · · · · · · · · · · · 11
13.Overcurrent Protection · 12
14.Ambient Temperature Drift · 13
15.Minimum Input Voltage for Regulated Output Voltage · · · · · · · · · · 13
16.Overvoltage Protection · 13
17.Figure of Testing Circuitry · 14
(Final Page 15)

COSEL

Model	UMA120F-48-Y
Item	Input Current (by Load Current)
Object	+48V2.5A

Temperature 25°C
Testing Circuitry Figure A

1.Graph

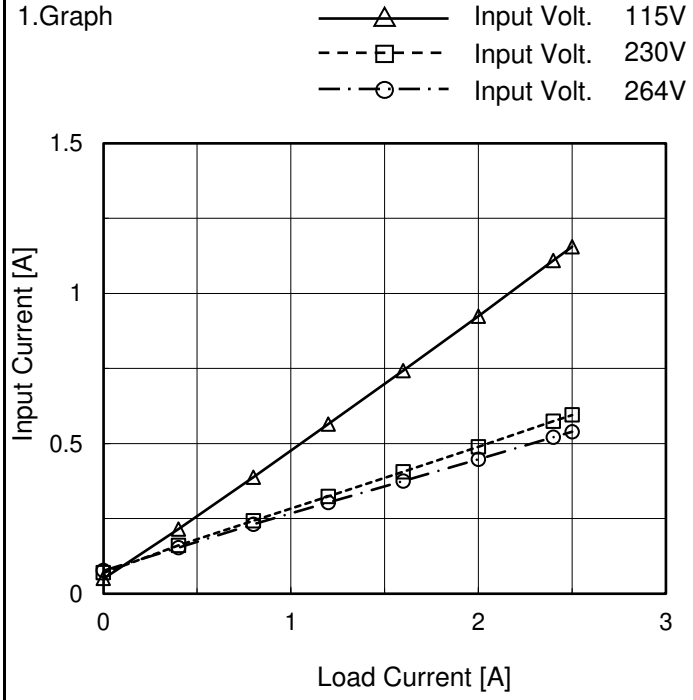

2.Values

Load Current [A]	Input Current [A]		
	Input Volt. 115[V]	Input Volt. 230[V]	Input Volt. 264[V]
0.0	0.051	0.070	0.077
0.4	0.215	0.161	0.154
0.8	0.387	0.243	0.231
1.2	0.564	0.324	0.304
1.6	0.743	0.406	0.376
2.0	0.924	0.489	0.448
2.4	1.110	0.574	0.521
2.5	1.155	0.595	0.540
--	-	-	-
--	-	-	-
--	-	-	-

COSEL

Model	UMA120F-48-Y
Item	Efficiency (by Load Current)
Object	+48V2.5A

Temperature 25°C
Testing Circuitry Figure A

1.Graph

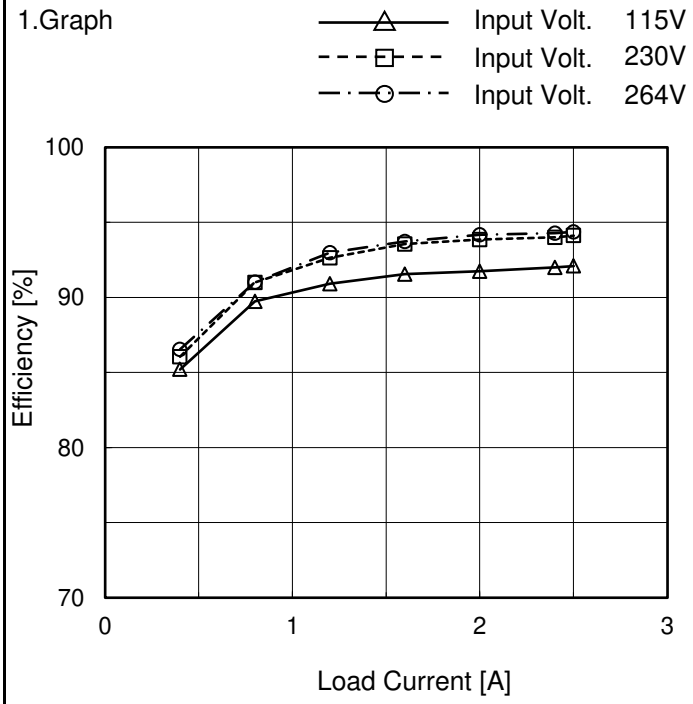

2.Values

Load Current [A]	Efficiency [%]		
	Input Volt. 115[V]	Input Volt. 230[V]	Input Volt. 264[V]
0.0	-	-	-
0.4	85.2	86.1	86.5
0.8	89.7	91.0	91.0
1.2	90.9	92.6	93.0
1.6	91.5	93.6	93.7
2.0	91.7	93.8	94.2
2.4	92.0	94.0	94.3
2.5	92.1	94.1	94.4
--	-	-	-
--	-	-	-
--	-	-	-

COSEL

Model	UMA120F-48-Y
Item	Power Factor (by Load Current)
Object	+48V2.5A

Temperature 25°C
Testing Circuitry Figure A

1.Graph

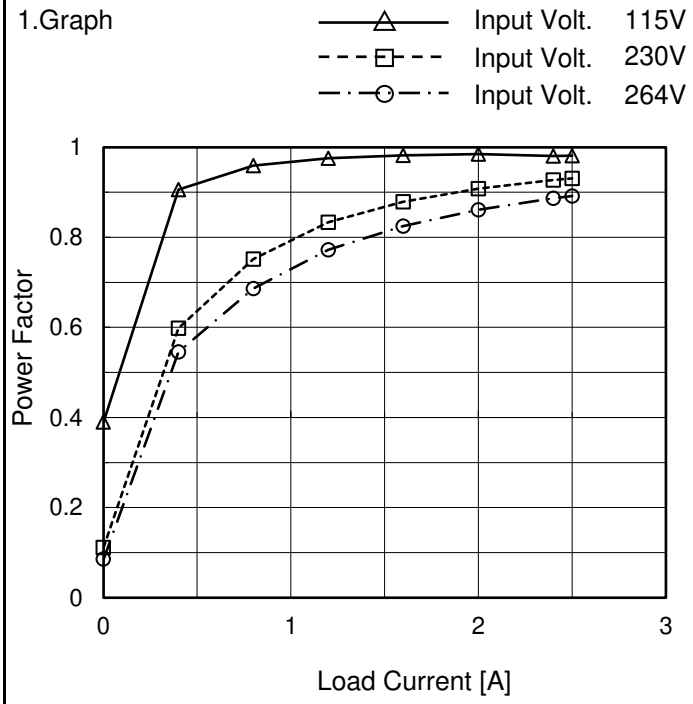

2.Values

Load Current [A]	Power Factor		
	Input Volt. 115[V]	Input Volt. 230[V]	Input Volt. 264[V]
0.0	0.390	0.111	0.086
0.4	0.906	0.598	0.546
0.8	0.959	0.752	0.686
1.2	0.976	0.833	0.772
1.6	0.982	0.879	0.825
2.0	0.985	0.908	0.861
2.4	0.981	0.927	0.887
2.5	0.981	0.931	0.892
--	-	-	-
--	-	-	-
--	-	-	-

COSEL

Model	UMA120F-48-Y	
Item	Inrush Current	Temperature 25°C Testing Circuitry Figure A
Object	+48V2.5A	

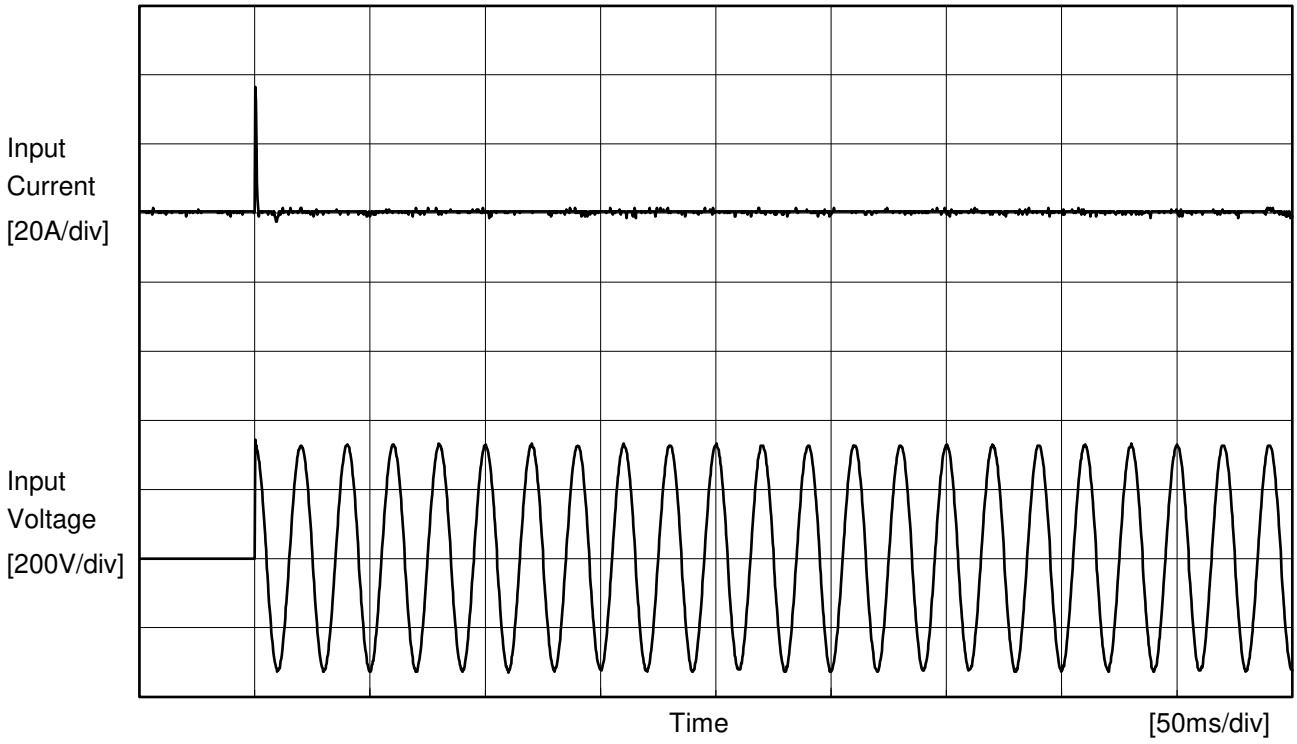

Input Voltage	230 V
Frequency	50 Hz
Load	100 %
Primary inrush current	36.5 A
Secondary inrush current	1.5 A

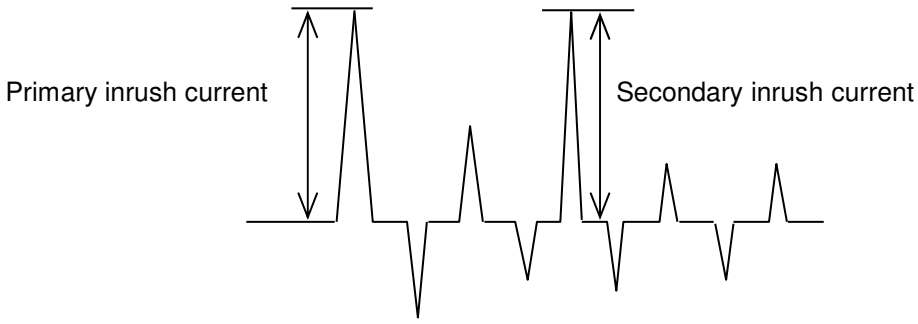

COSEL

Model	UMA120F-48-Y	
Item	Leakage Current	Temperature 25°C Testing Circuitry Figure C
Object	+48V2.5A	

1.Results

[mA]

Standards	Testing Circuitry	Measuring Method	Input Volt.			Note
			115 [V]	230 [V]	264 [V]	
IEC60601-1	Figure C-1	Both phases	0.05	0.10	0.12	Operation
		One of phases	0.09	0.20	0.23	Stand by
IEC62368-1	Figure C-2	Both phases	0.05	0.10	0.12	Operation
		One of phases	0.09	0.20	0.23	Stand by
	Figure C-3	Both phases	0.05	0.10	0.12	Operation
		One of phases	0.09	0.20	0.23	Stand by

The value for "One of phases" is the reference value only.

2.Condition

Leakage current value is concluded after measuring both phases of AC input and by choosing the larger one.

COSEL

Model	UMA120F-48-Y
Item	Line Regulation
Object	+48V2.5A

Temperature 25°C
Testing Circuitry Figure A

1.Graph

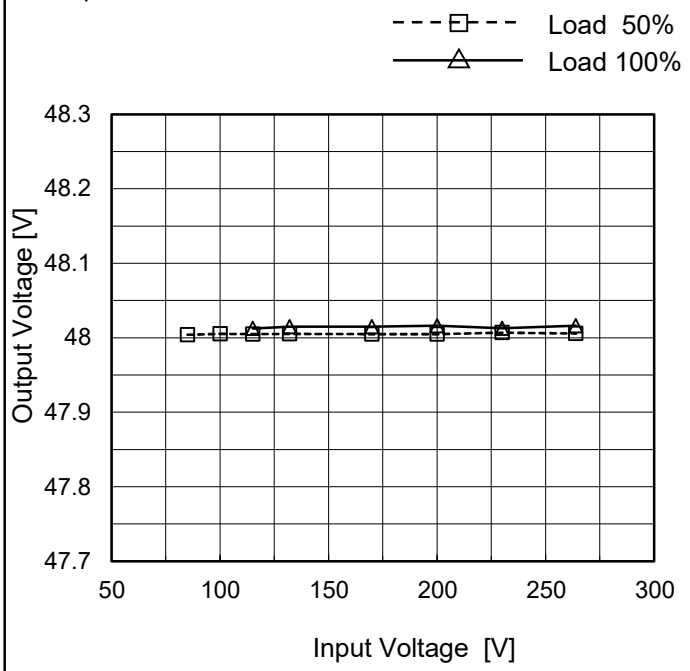

2.Values

Input Voltage [V]	Output Voltage [V]	
	Load 50%	Load 100%
85	48.004	-
100	48.006	-
115	48.005	48.013
132	48.005	48.015
170	48.005	48.015
200	48.005	48.016
230	48.007	48.013
264	48.006	48.016
--	-	-

COSEL

Model	UMA120F-48-Y
Item	Load Regulation
Object	+48V2.5A

Temperature 25°C
Testing Circuitry Figure A

1.Graph

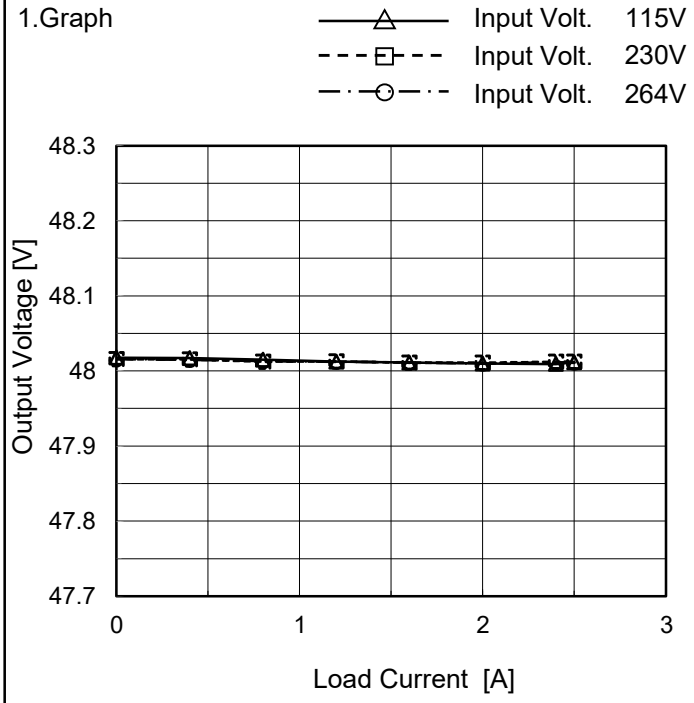

2.Values

Load Current [A]	Output Voltage [V]		
	Input Volt. 115[V]	Input Volt. 230[V]	Input Volt. 264[V]
0.0	48.018	48.016	48.016
0.4	48.017	48.015	48.015
0.8	48.015	48.013	48.013
1.2	48.013	48.013	48.013
1.6	48.011	48.011	48.012
2.0	48.010	48.011	48.010
2.4	48.009	48.012	48.012
2.5	48.011	48.013	48.011
--	--	--	--
--	--	--	--
--	--	--	--

Item	Ripple-Noise
Object	+48V2.5A

Temperature 25°C
Testing Circuitry Figure B

1.Graph

Input Voltage 230V
Load 100%

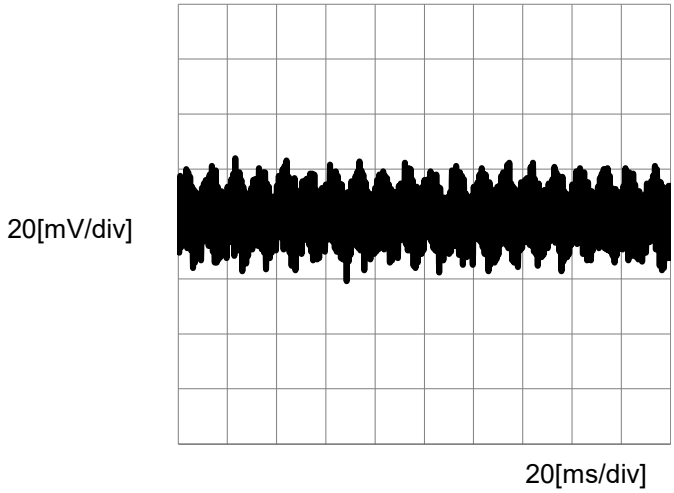

COSEL

Model	UMA120F-48-Y	
Item	Dynamic Load Response	Temperature 25°C Testing Circuitry Figure A
Object	+48V2.5A	

Input Volt. 230 V
Cycle 1000 ms

t1,t2 = 50 μs

Load Current

t1 t2

Min.Load (0A)←→
Load 100% (2.5A)

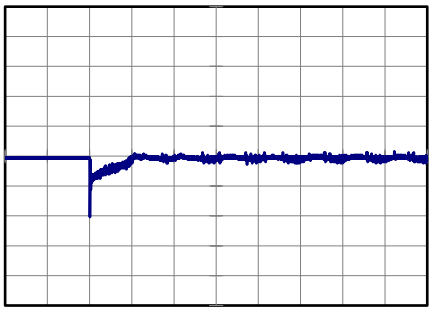

200 mV/div

10 ms/div 10 ms/div

Load 50% (1.25A)←→
Load 100% (2.5A)

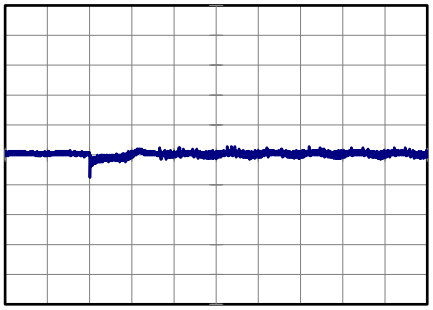

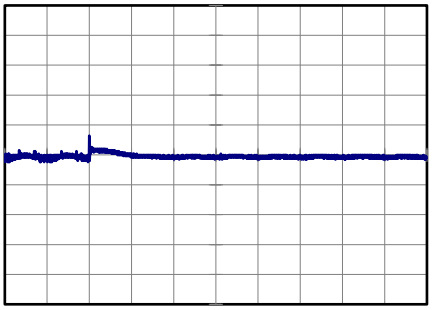

200 mV/div

10 ms/div 10 ms/div

COSEL

Model	UMA120F-48-Y	
Item	Rise and Fall Time	Temperature 25°C Testing Circuitry Figure A
Object	+48V2.5A	

1.Graph

Input Volt. 230 V

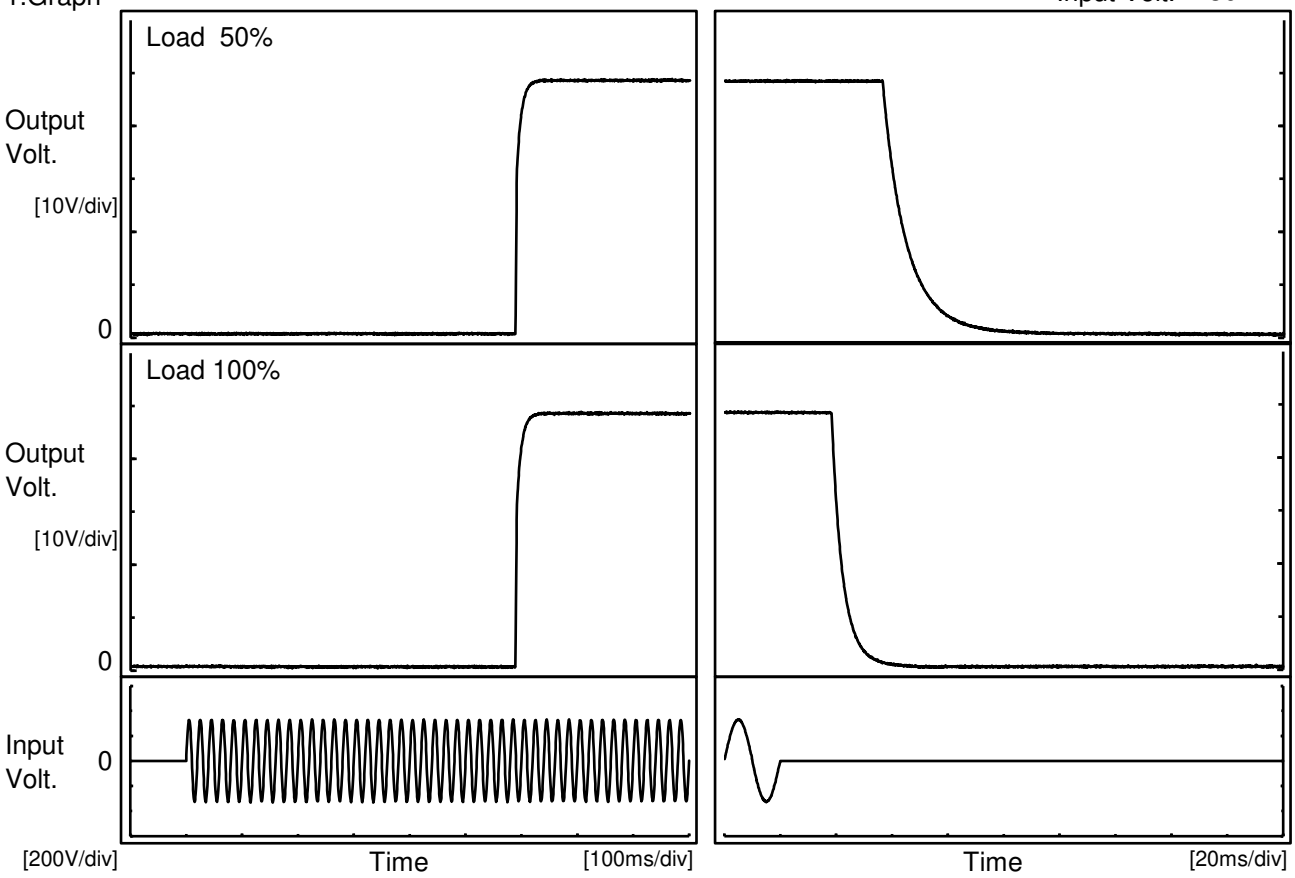

2.Values

[ms]

Load \ Time	Td	Tr	Ts	Th	Tf
50 %	589.0	12.0	601.0	37.3	19.7
100 %	588.5	13.0	601.5	18.7	9.2

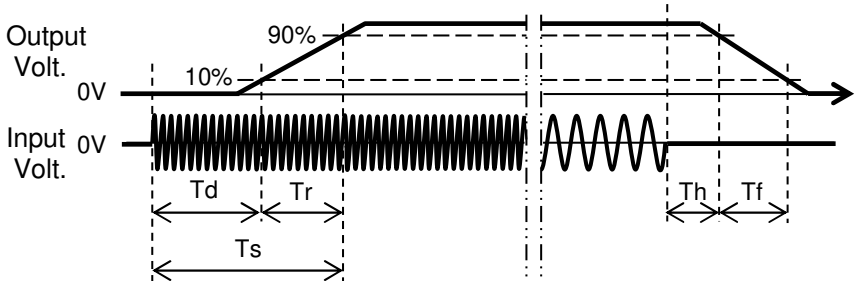

COSEL

Model	UMA120F-48-Y
Item	Hold-Up Time
Object	+48V2.5A

Temperature 25°C
Testing Circuitry Figure A

1.Graph

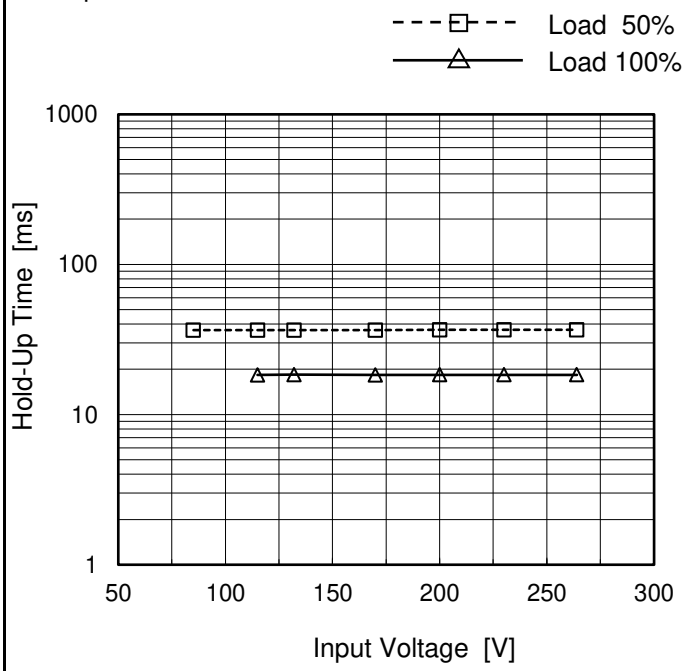

This duration covers from Shut-off of input voltage to the moment when output voltage descends to the rated range of voltage accuracy.

2.Values

Input Voltage [V]	Hold-Up Time [ms]	
	Load 50%	Load 100%
85	37	-
100	36	-
115	37	18
132	37	18
170	37	18
200	37	18
230	37	18
264	37	18
--	-	-

COSEL

Model	UMA120F-48-Y
Item	Instantaneous Interruption Compensation
Object	+48V2.5A

Temperature 25°C
Testing Circuitry Figure A

1.Graph

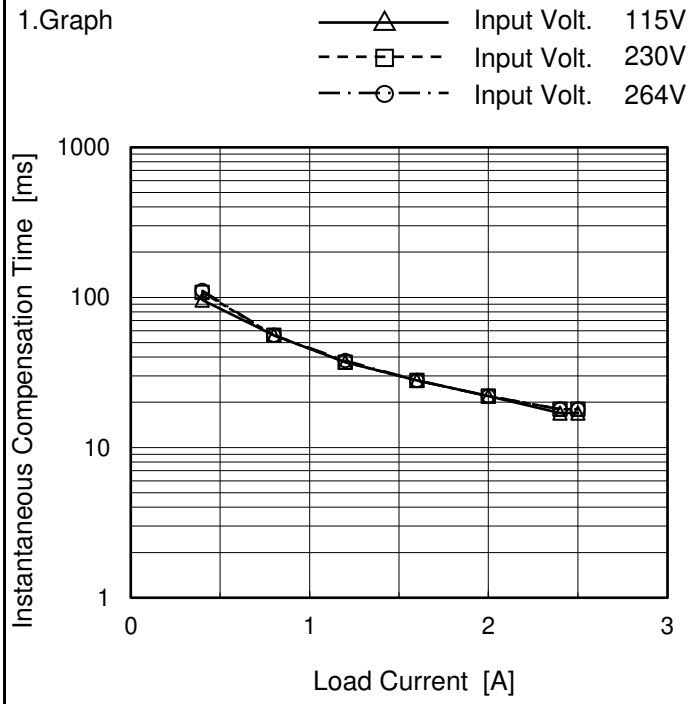

2.Values

Load Current [A]	Time [ms]		
	Input Volt. 115[V]	Input Volt. 230[V]	Input Volt. 264[V]
0.0	-	-	-
0.4	96	108	111
0.8	56	56	56
1.2	37	37	38
1.6	28	28	28
2.0	22	22	22
2.4	17	18	18
2.5	17	18	18
--	-	-	-
--	-	-	-
--	-	-	-

COSEL

Model	UMA120F-48-Y
Item	Overcurrent Protection
Object	+48V2.5A

Temperature 25°C
Testing Circuitry Figure A

1.Graph

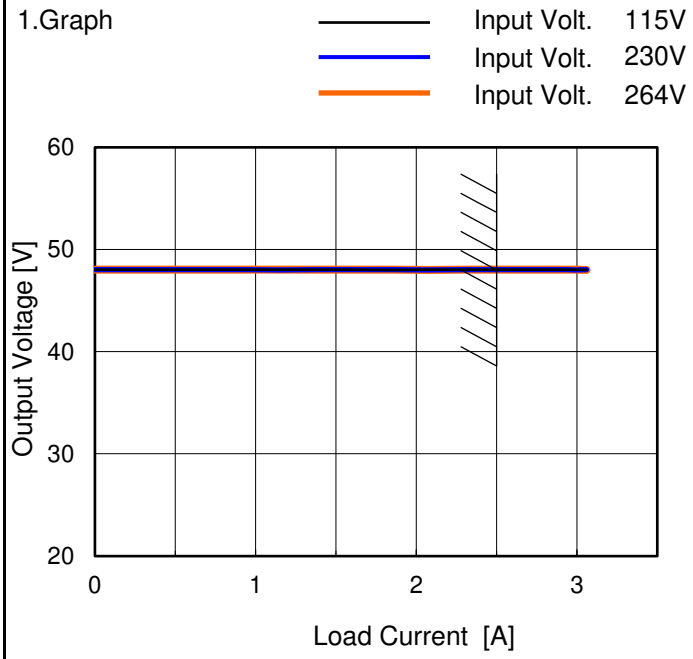

Note: Slanted line shows the range of the rated load current.

Overcurrent protection is Hiccup mode.

2.Values

Output Voltage [V]	Load Current [A]		
	Input Volt. 115[V]	Input Volt. 230[V]	Input Volt. 264[V]
48	3.06	3.06	3.06
--	-	-	-
--	-	-	-
--	-	-	-
--	-	-	-
--	-	-	-
--	-	-	-
--	-	-	-
--	-	-	-
--	-	-	-
--	-	-	-
--	-	-	-

COSEL

Model	UMA120F-48-Y
Item	Ambient Temperature Drift
Object	+48V2.5A

Testing Circuitry Figure A

1.Values

Load 100%

Ambient Temperature[℃]	Output Voltage [V]		
	Input Volt. 115V	Input Volt. 230V	Input Volt. 264V
-20	47.881	47.888	47.897
25	48.019	48.023	48.022
40	48.038	48.038	48.038

Item	Minimum Input Voltage for Regulated Output Voltage
Object	+48V2.5A

Testing Circuitry Figure A

1.Values

Ambient Temperature[℃]	Input Voltage [V]	
	Load 50%	Load 100%
-20	50	58
25	50	59
40	50	57

Item	Overvoltage Protection
Object	+48V2.5A

Testing Circuitry Figure A

1.Values

Load 0%

Ambient Temperature[℃]	Operating Point [V]	
	Input Volt. 115V	Input Volt. 264V
-20	62.87	62.19
25	62.12	62.27
40	63.17	63.02

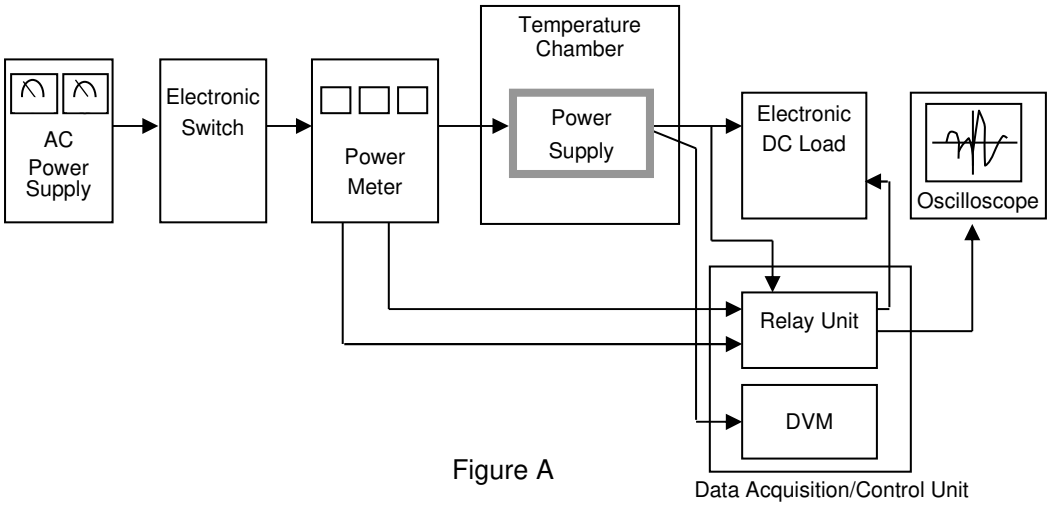

Figure A

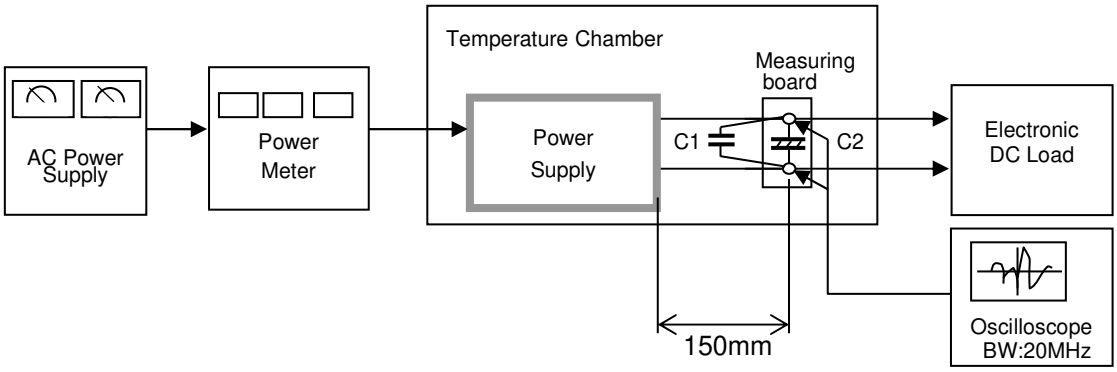

(Ceramic capacitor)
C1= 0.1 μF

Figure B

(Electrolytic capacitor)
C2= 47 μF

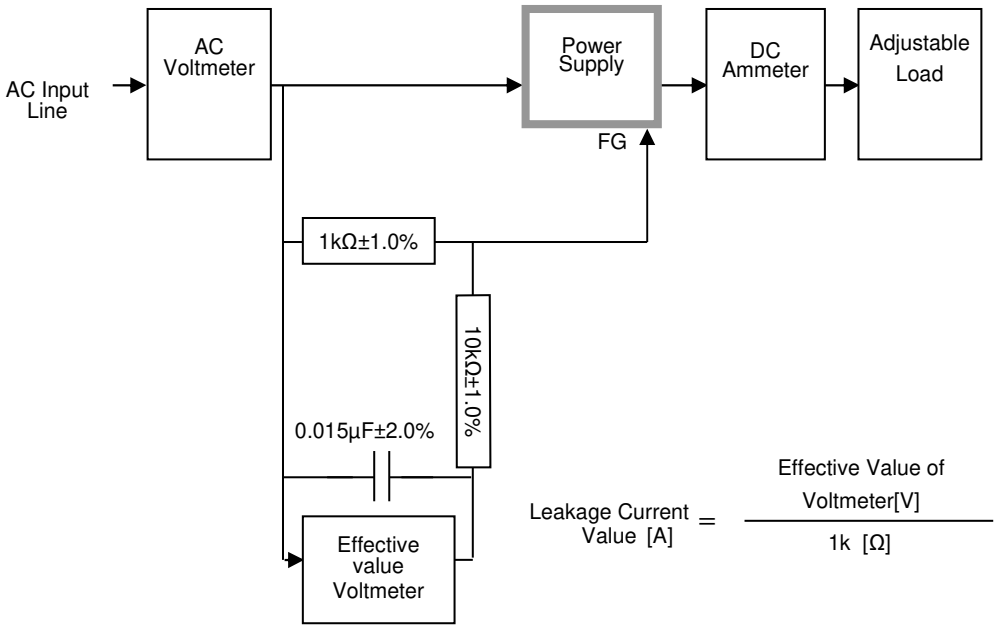

$$\text{Leakage Current Value [A]} = \frac{\text{Effective Value of Voltmeter[V]}}{1\text{k [}\Omega\text{]}}$$

Figure C-1 (IEC60601-1)

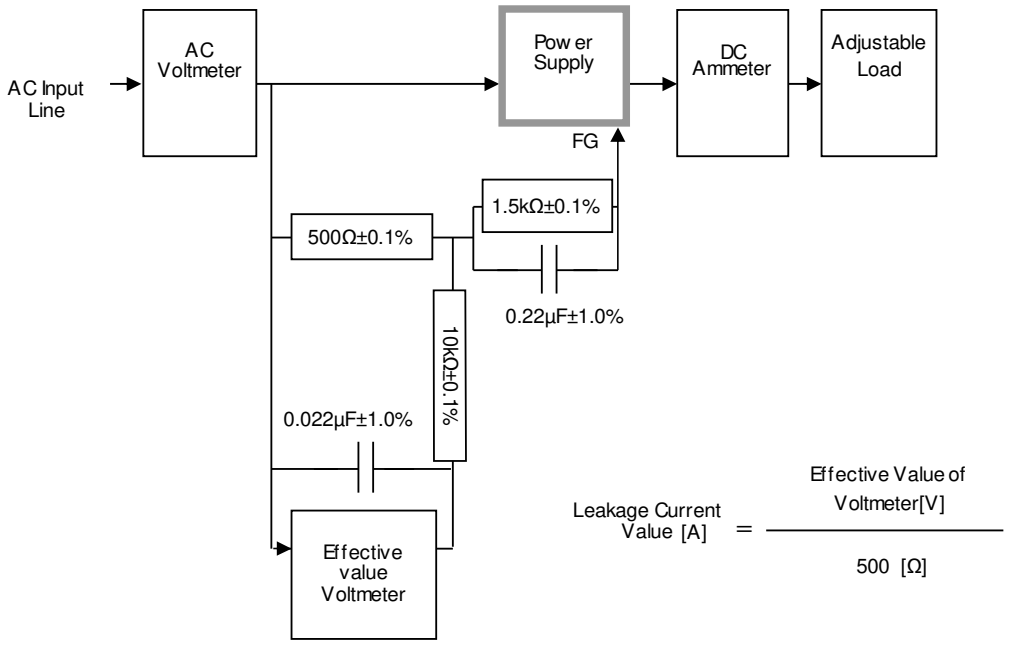

Figure C-2 (IEC62368-1 refer to IEC60990 Fig.4)

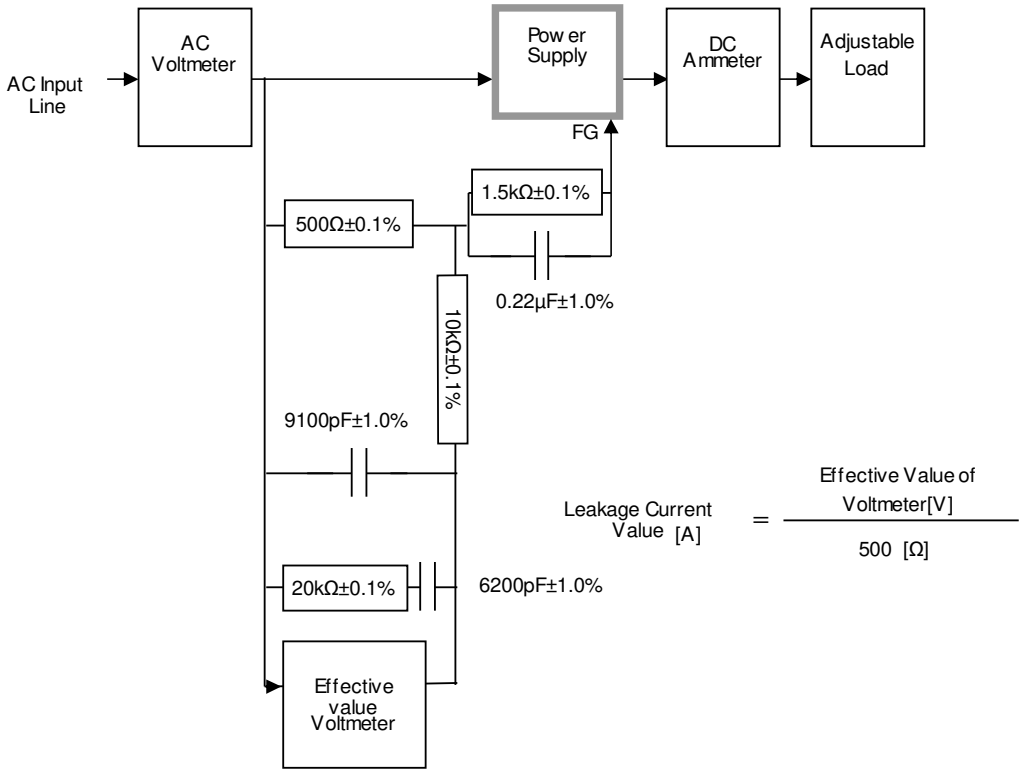

Figure C-3 (IEC62368-1 refer to IEC60990 Fig.5)