For Reference

COSEL

TEST DATA OF UMA60F-24

Regulated DC Power Supply
January 12, 2023

Approved by : *Takashi Kajii*
Design Manager

Prepared by : *Jeonghoon Yi*
Design Engineer

COSEL CO.,LTD.

COSEL

CONTENTS

1.Input Current (by Load Current) · 1
2.Efficiency (by Load Current) · 2
3.Power Factor (by Load Current) · 3
4.Inrush Current · 4
5.Leakage Current · 5
6.Line Regulation · 6
7.Load Regulation · 7
8.Ripple-Noise · 7
9.Dynamic Load Response · 8
10.Rise and Fall Time · 9
11.Hold-Up Time · 10
12.Instantaneous Interruption Compensation · · · · · · · · · · · · · · · · · 11
13.Overcurrent Protection · 12
14.Ambient Temperature Drift · 13
15.Minimum Input Voltage for Regulated Output Voltage · · · · · · · · · · 13
16.Overvoltage Protection · 13
17.Figure of Testing Circuitry · 14
(Final Page 15)

COSEL

Model	UMA60F-24
Item	Input Current (by Load Current)
Object	+24V2.5A

Temperature 25°C
Testing Circuitry Figure A

1.Graph

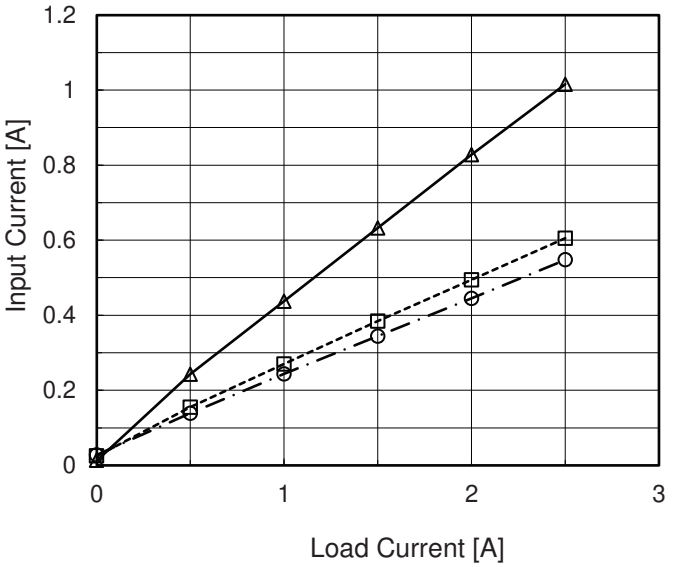

2.Values

Load Current [A]	Input Current [A]		
	Input Volt. 115[V]	Input Volt. 230[V]	Input Volt. 264[V]
0.0	0.013	0.025	0.028
0.5	0.243	0.155	0.139
1.0	0.437	0.270	0.244
1.5	0.633	0.384	0.344
2.0	0.827	0.494	0.445
2.5	1.015	0.606	0.548
--	-	-	-
--	-	-	-
--	-	-	-
--	-	-	-
--	-	-	-

BC-11919

COSEL

Model	UMA60F-24
Item	Efficiency (by Load Current)
Object	+24V2.5A

Temperature 25°C
Testing Circuitry Figure A

1.Graph

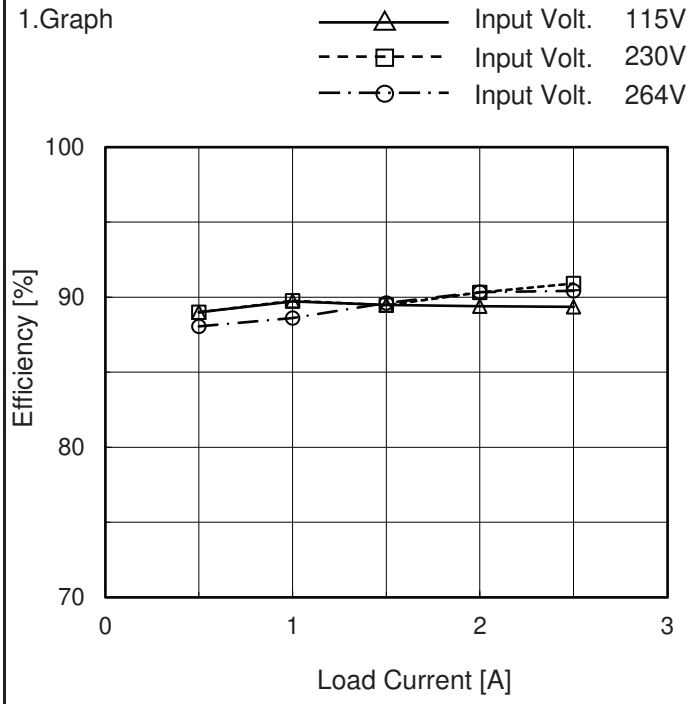

2.Values

Load Current [A]	Efficiency [%]		
	Input Volt. 115[V]	Input Volt. 230[V]	Input Volt. 264[V]
0.0	-	-	-
0.5	89.0	89.0	88.1
1.0	89.7	89.8	88.6
1.5	89.5	89.5	89.6
2.0	89.4	90.3	90.3
2.5	89.4	90.9	90.4
--	-	-	-
--	-	-	-
--	-	-	-
--	-	-	-
--	-	-	-

BC-11919

COSEL

Model	UMA60F-24
Item	Power Factor (by Load Current)
Object	+24V2.5A

Temperature 25°C
Testing Circuitry Figure A

1.Graph

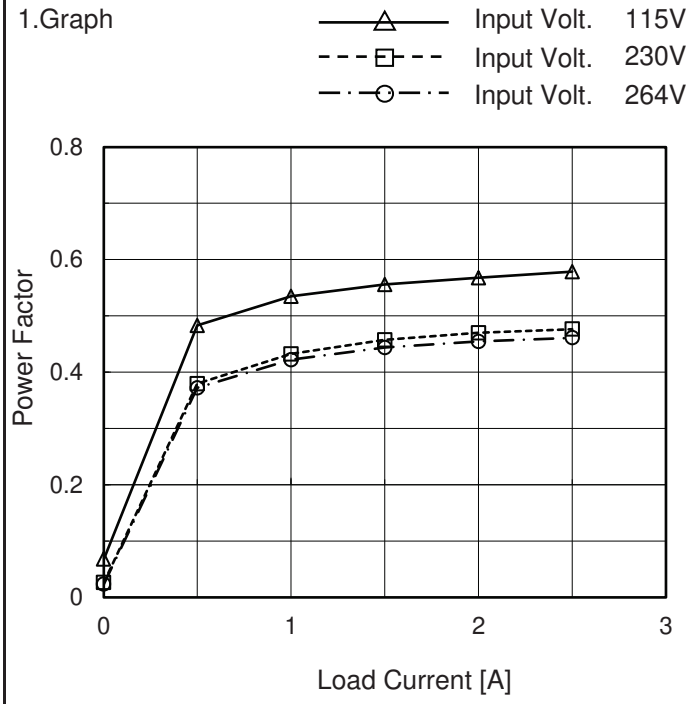

2.Values

Load Current [A]	Power Factor		
	Input Volt. 115[V]	Input Volt. 230[V]	Input Volt. 264[V]
0.0	0.068	0.026	0.024
0.5	0.483	0.379	0.372
1.0	0.535	0.432	0.422
1.5	0.556	0.458	0.444
2.0	0.568	0.470	0.455
2.5	0.579	0.477	0.461
--	-	-	-
--	-	-	-
--	-	-	-
--	-	-	-
--	-	-	-

BC-11919

COSEL

Model	UMA60F-24	Temperature 25°C
Item	Inrush Current	Testing Circuitry Figure A
Object	+24V2.5A	

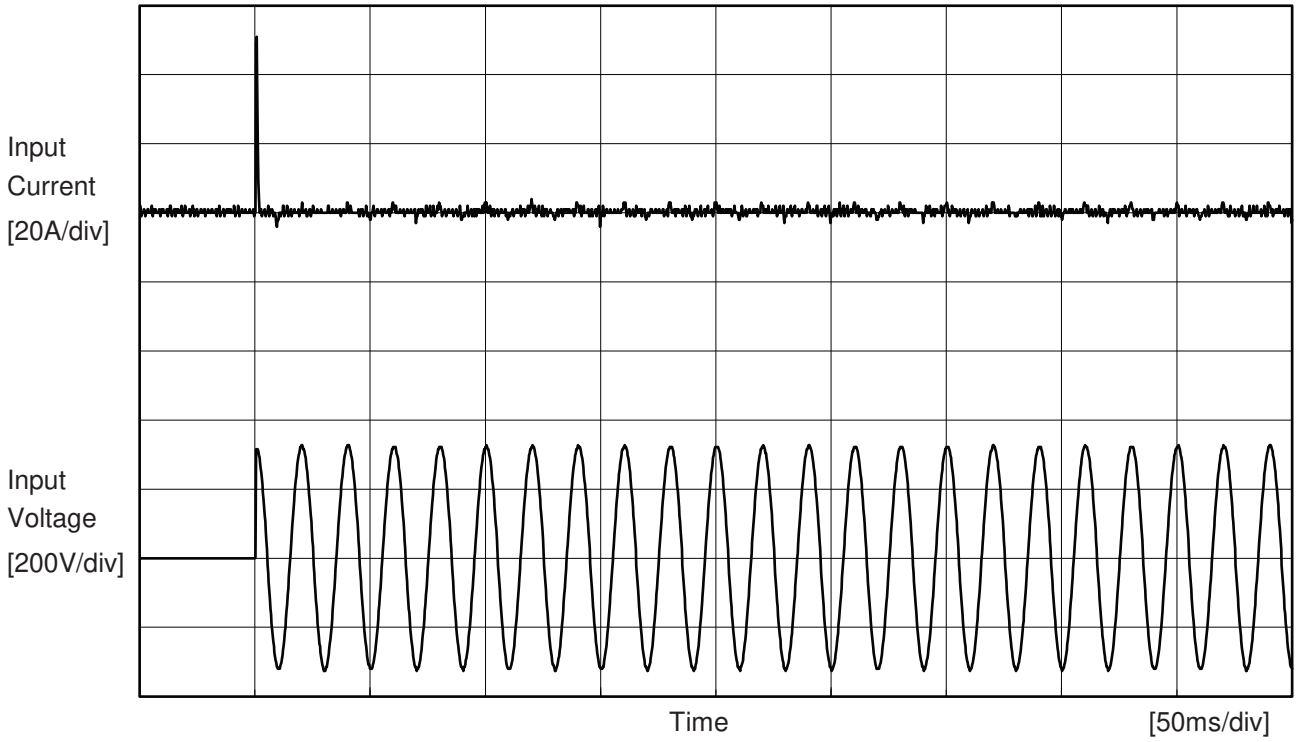

Input Voltage	230 V
Frequency	50 Hz
Load	100 %
Primary inrush current	51.0 A
Secondary inrush current	4.0 A

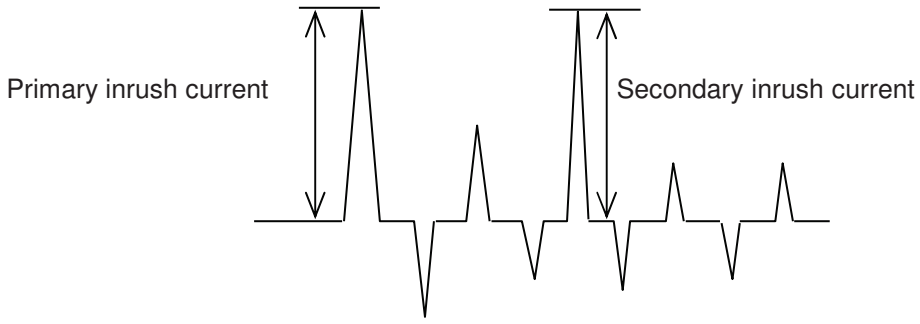

COSEL

Model	UMA60F-24
Item	Leakage Current
Object	+24V2.5A

Temperature 25°C
Testing Circuitry Figure C

1.Results

[mA]

Standards	Testing Circuitry	Measuring Method	Input Volt.			Note
			115 [V]	230 [V]	264 [V]	
IEC60601-1	Figure C-1	Both phases	0.05	0.11	0.13	Operation
		One of phases	0.10	0.21	0.25	Stand by
IEC62368-1	Figure C-2	Both phases	0.05	0.11	0.13	Operation
		One of phases	0.10	0.21	0.25	Stand by
	Figure C-3	Both phases	0.05	0.11	0.13	Operation
		One of phases	0.10	0.21	0.25	Stand by

The value for "One of phases" is the reference value only.

2.Condition

Leakage current value is concluded after measuring both phases of AC input and by choosing the larger one.

COSEL

Model	UMA60F-24
Item	Line Regulation
Object	+24V2.5A

Temperature 25°C
Testing Circuitry Figure A

1.Graph

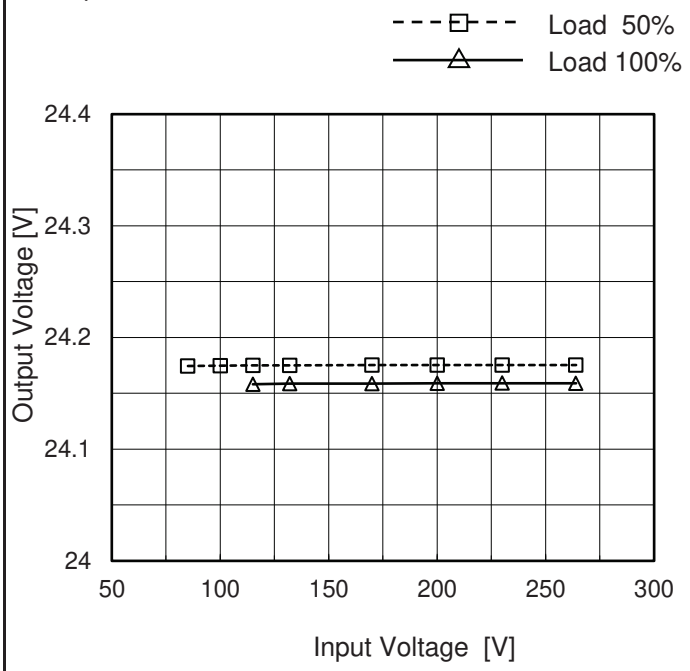

2.Values

Input Voltage [V]	Output Voltage [V]	
	Load 50%	Load 100%
85	24.174	-
100	24.175	-
115	24.175	24.158
132	24.175	24.159
170	24.175	24.159
200	24.175	24.159
230	24.175	24.159
264	24.175	24.159
--	-	-

BC-11919

COSEL

Model	UMA60F-24
Item	Load Regulation
Object	+24V2.5A

Temperature 25°C
Testing Circuitry Figure A

1.Graph

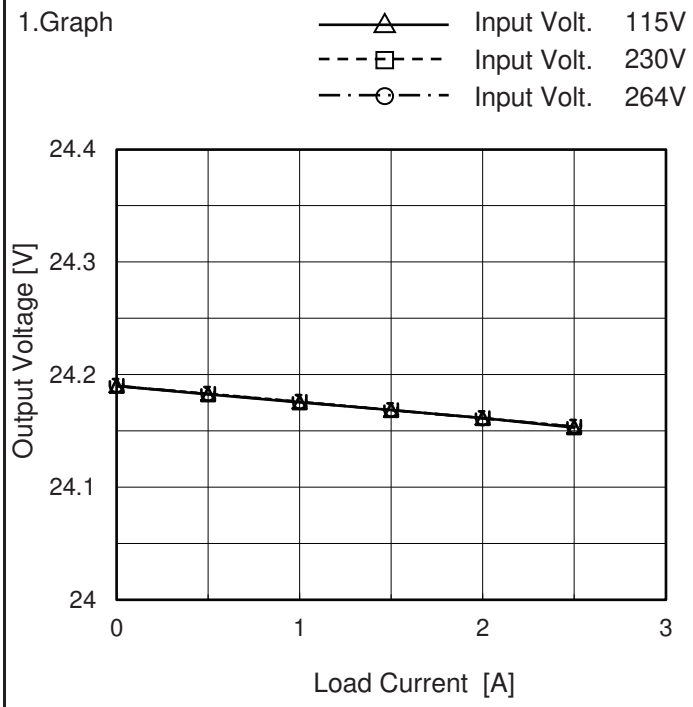

2.Values

Load Current [A]	Output Voltage [V]		
	Input Volt. 115[V]	Input Volt. 230[V]	Input Volt. 264[V]
0.0	24.190	24.190	24.190
0.5	24.182	24.183	24.183
1.0	24.175	24.176	24.176
1.5	24.168	24.169	24.169
2.0	24.161	24.161	24.161
2.5	24.153	24.154	24.154
--	--	--	--
--	--	--	--
--	--	--	--
--	--	--	--
--	--	--	--

Item	Ripple-Noise
Object	+24V2.5A

Temperature 25°C
Testing Circuitry Figure B

1.Graph

Input Voltage 230V
Load 100%

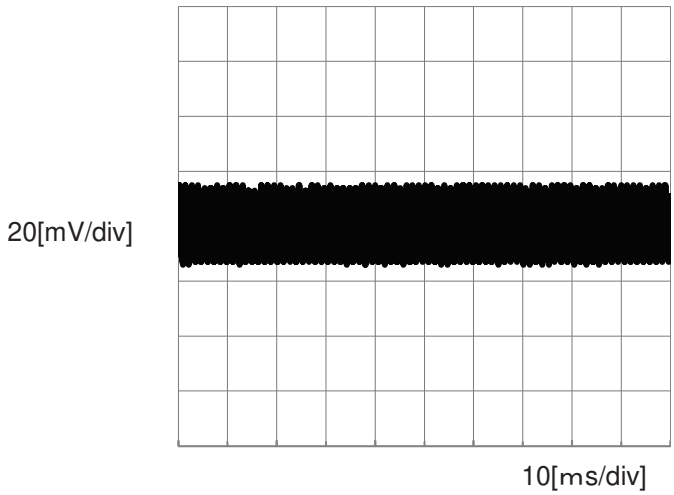

BC-11919

COSEL

Model	UMA60F-24	
Item	Dynamic Load Response	Temperature 25°C Testing Circuitry Figure A
Object	+24V2.5A	

Input Volt. 230 V
Cycle 1000 ms

Min.Load (0A)←→
Load 100% (2.5A)

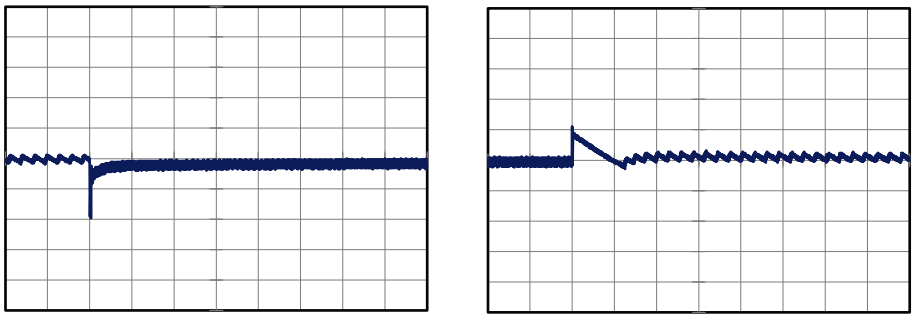

200 mV/div

10 ms/div 10 ms/div

Load 50% (1.25A)←→
Load 100% (2.5A)

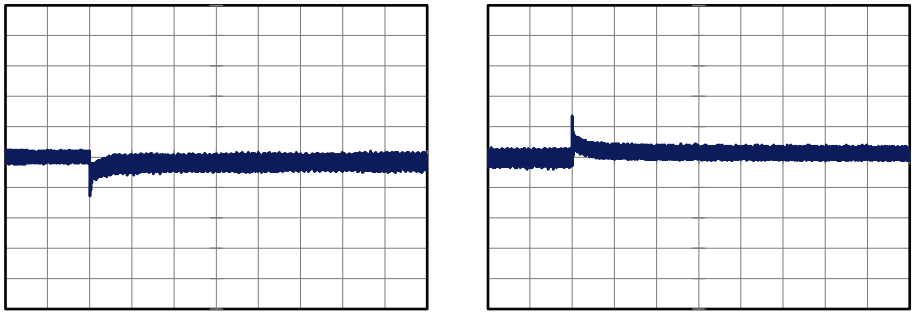

100 mV/div

10 ms/div 10 ms/div

COSEL

Model	UMA60F-24
Item	Rise and Fall Time
Object	+24V2.5A

Temperature 25°C
Testing Circuitry Figure A

1.Graph

Input Volt. 230 V

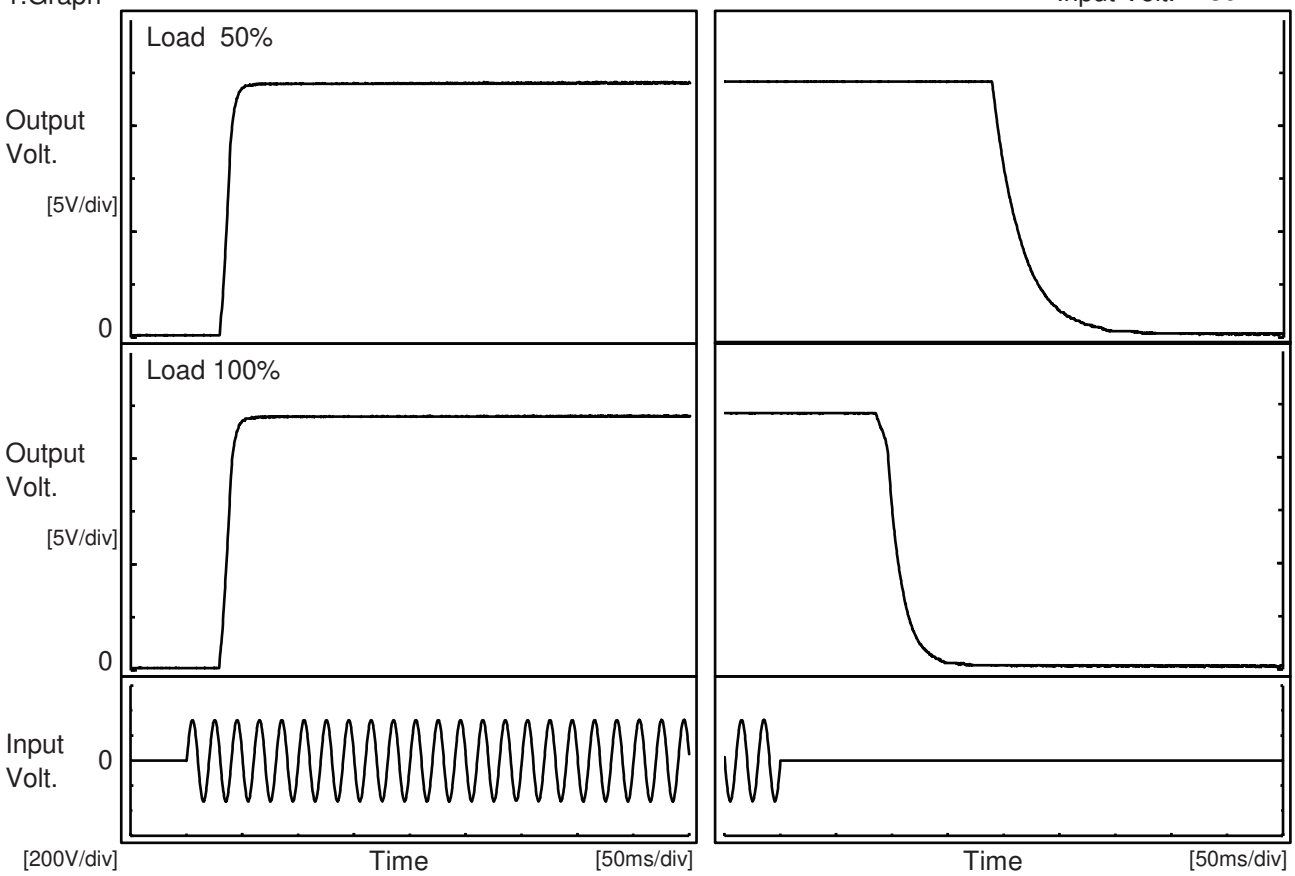

2.Values

[ms]

Load \ Time	Td	Tr	Ts	Th	Tf
50 %	31.8	11.8	43.6	191.8	56.5
100 %	31.5	12.0	43.5	93.3	30.3

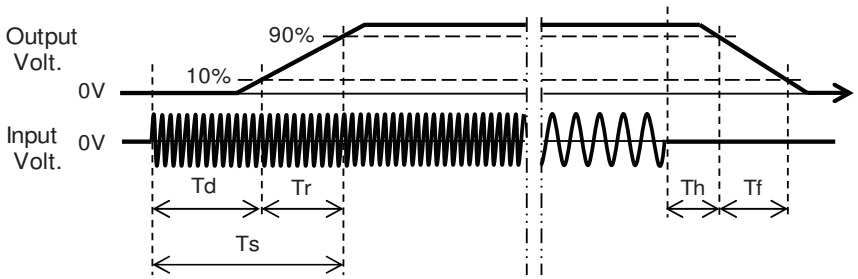

BC-11919

COSEL

Model	UMA60F-24
Item	Hold-Up Time
Object	+24V2.5A

Temperature 25°C
Testing Circuitry Figure A

1.Graph

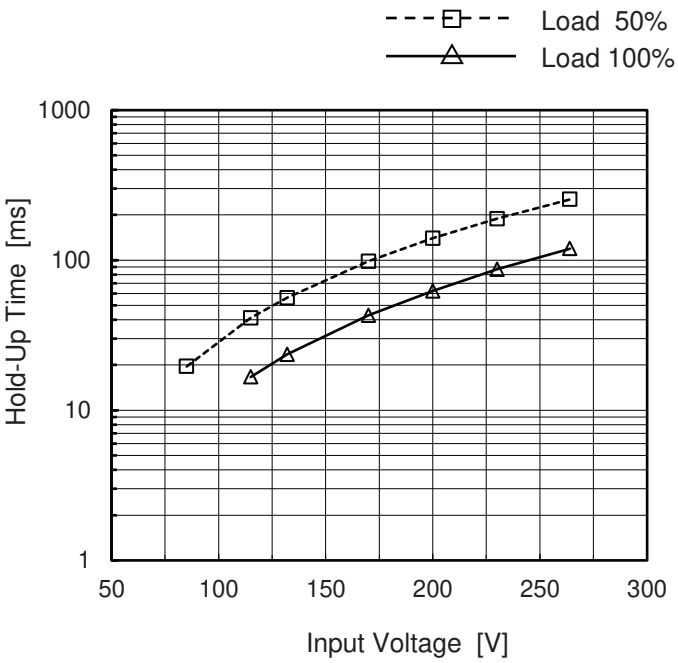

This duration covers from Shut-off of input voltage to the moment when output voltage descends to the rated range of voltage accuracy.

2.Values

Input Voltage [V]	Hold-Up Time [ms]	
	Load 50%	Load 100%
85	20	-
100	30	-
115	41	17
132	56	24
170	98	43
200	140	62
230	189	87
264	254	119
--	-	-

BC-11919

COSEL

Model	UMA60F-24
Item	Instantaneous Interruption Compensation
Object	+24V2.5A

Temperature 25°C
Testing Circuitry Figure A

1.Graph

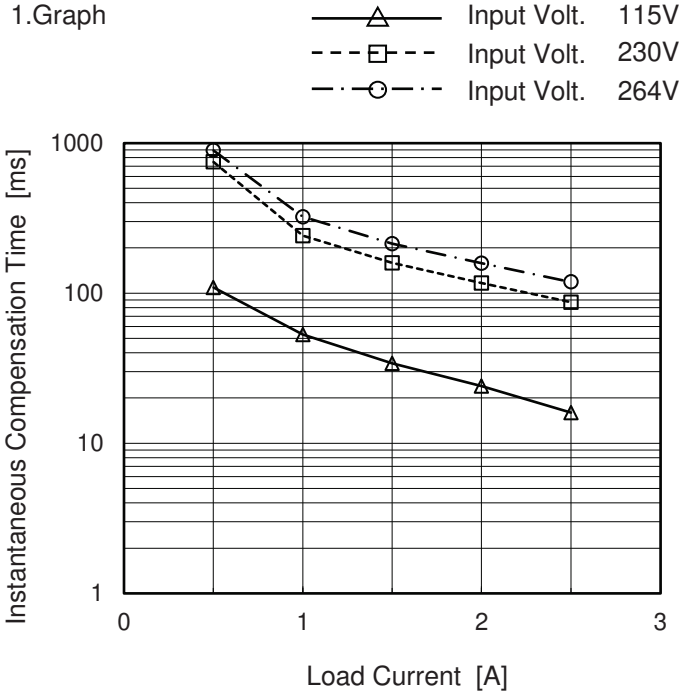

2.Values

Load Current [A]	Time [ms]		
	Input Volt. 115[V]	Input Volt. 230[V]	Input Volt. 264[V]
0.0	-	-	-
0.5	109	750	895
1.0	53	241	323
1.5	34	159	214
2.0	24	117	158
2.5	16	87	119
--	-	-	-
--	-	-	-
--	-	-	-
--	-	-	-
--	-	-	-

COSEL

Model	UMA60F-24
Item	Overcurrent Protection
Object	+24V2.5A

Temperature 25°C
Testing Circuitry Figure A

1.Graph

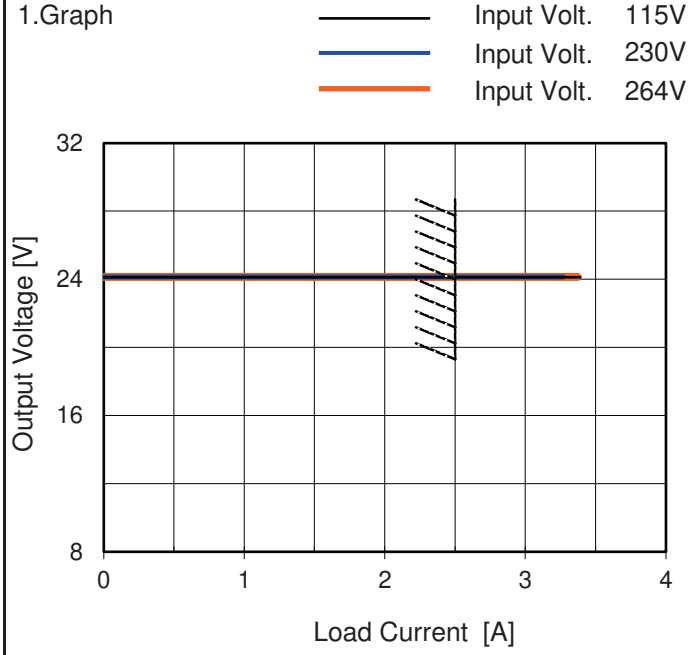

Note: Slanted line shows the range of the rated load current.

Overcurrent protection is Hiccup mode.

2.Values

Output Voltage [V]	Load Current [A]		
	Input Volt. 115[V]	Input Volt. 230[V]	Input Volt. 264[V]
24	3.39	3.24	3.37
--	-	-	-
--	-	-	-
--	-	-	-
--	-	-	-
--	-	-	-
--	-	-	-
--	-	-	-
--	-	-	-
--	-	-	-
--	-	-	-
--	-	-	-

COSEL

Model	UMA60F-24
Item	Ambient Temperature Drift
Object	+24V2.5A

Testing Circuitry Figure A

1.Values

Load 100%

Ambient Temperature[℃]	Output Voltage [V]		
	Input Volt. 115V	Input Volt. 230V	Input Volt. 264V
-20	24.081	24.084	24.085
25	24.154	24.155	24.155
50	24.170	24.171	24.171

Item	Minimum Input Voltage for Regulated Output Voltage
Object	+24V2.5A

Testing Circuitry Figure A

1.Values

Ambient Temperature[℃]	Input Voltage [V]	
	Load 50%	Load 100%
-20	36	65
25	37	65
50	34	66

Item	Overvoltage Protection
Object	+24V2.5A

Testing Circuitry Figure A

1.Values

Load 0%

Ambient Temperature[℃]	Operating Point [V]	
	Input Volt. 115V	Input Volt. 264V
-20	30.15	30.15
25	31.42	31.42
50	32.09	32.17

COSEL

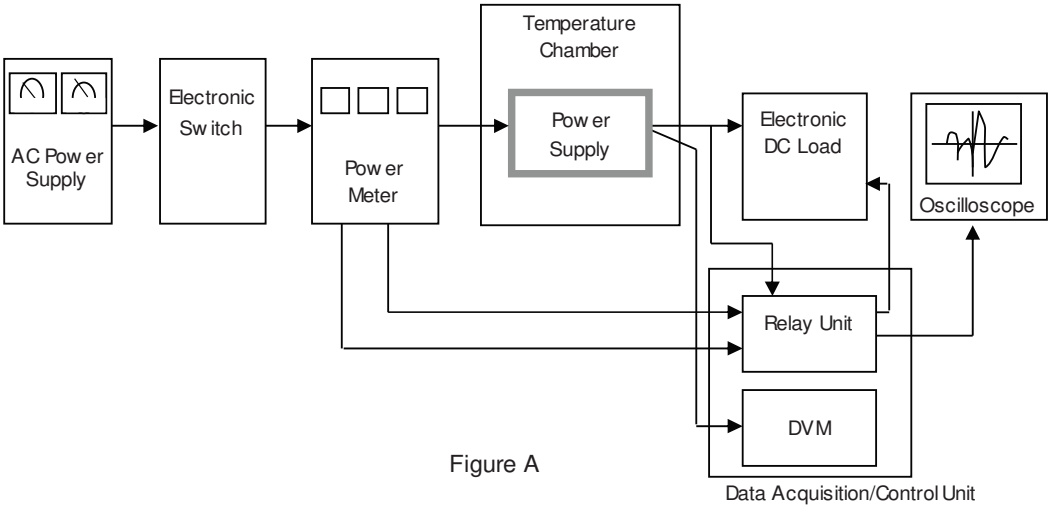

Figure A

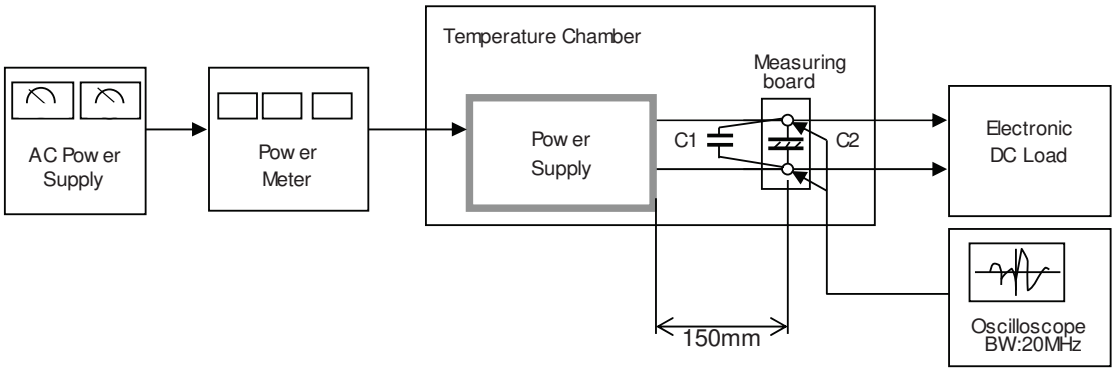

(Ceramic capacitor)
C1= 0.1 μF

(Electrolytic capacitor)
C2= 47 μF

Figure B

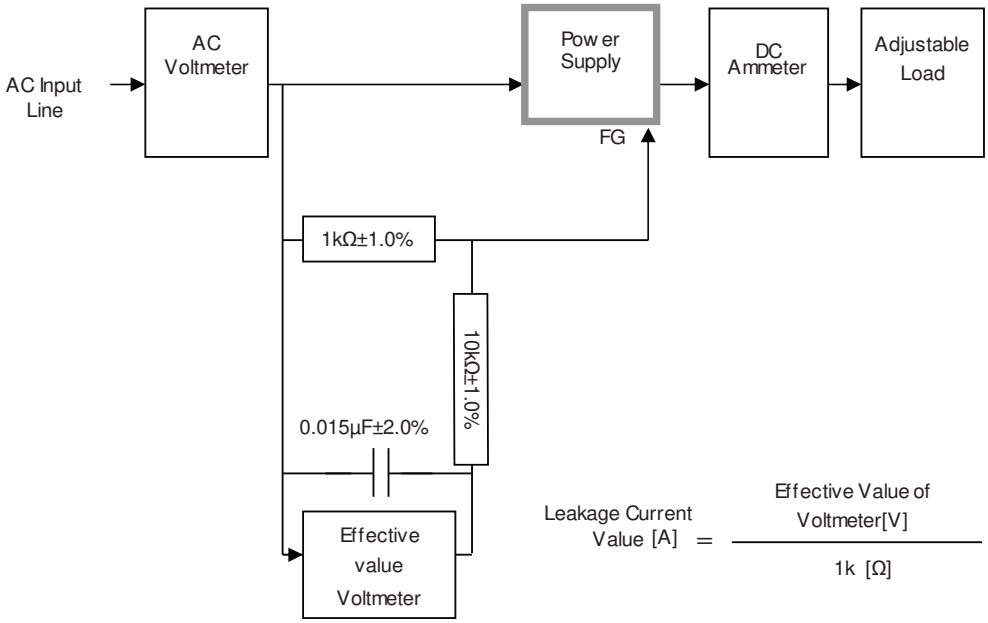

$$\text{Leakage Current Value [A]} = \frac{\text{Effective Value of Voltmeter[V]}}{1\text{k [}\Omega\text{]}}$$

Figure C-1 (IEC60601-1)

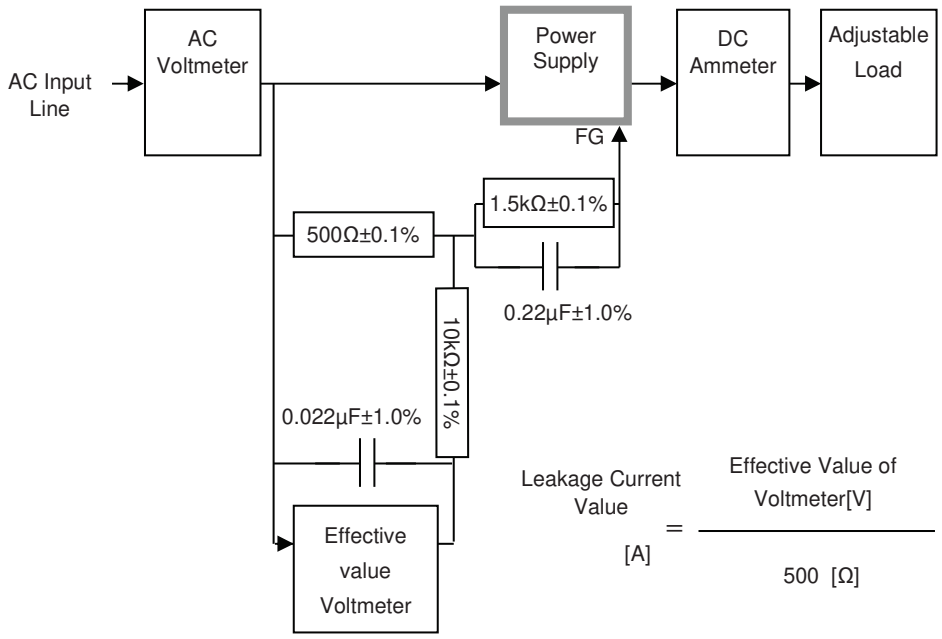

Figure C-2 (IEC62368-1 refer to IEC60990 Fig.4)

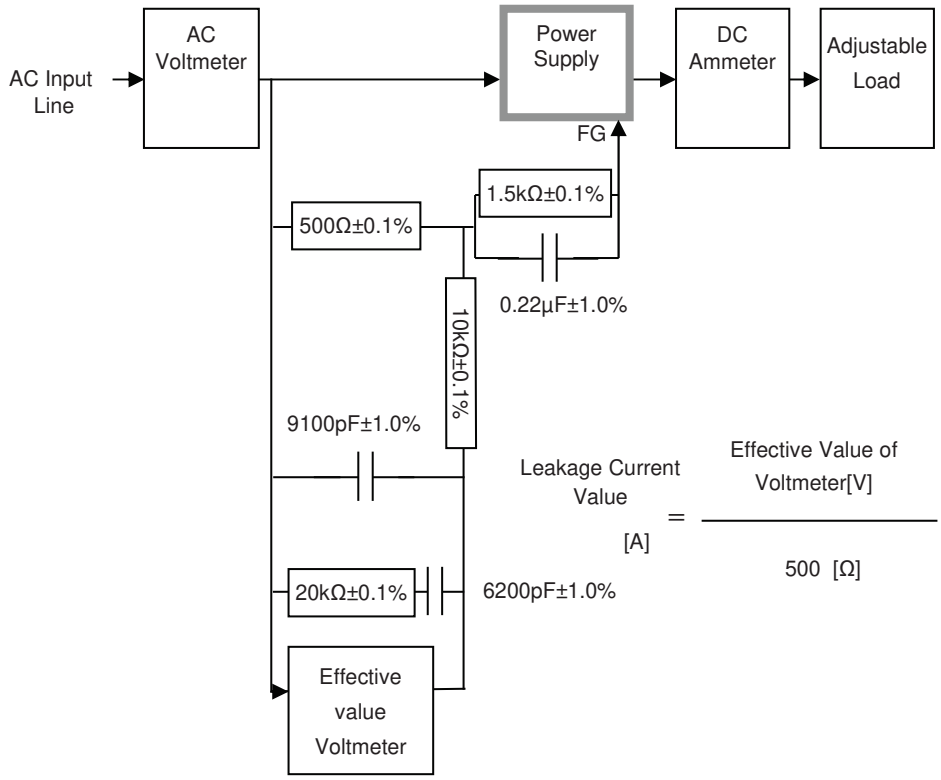

Figure C-3 (IEC62368-1 refer to IEC60990 Fig.5)