参考資料

COSEL

TEST DATA OF ZTS32405

(24.0V INPUT)

Regulated DC Power Supply

Date : Mar.5. 1998

Approved by : N. Shiraishi
Design Manager

Prepared by : T. Tsuri
Design Engineer

コーセル株式会社

COSEL CO.,LTD.

COSEL

CONTENTS

1. Line Regulation ・・・・・・・・・・・・・・・・・・・・・・ 1
静的入力変動
2. Efficiency ・・・・・・・・・・・・・・・・・・・・・・・・・ 2
効率
3. Load Regulation ・・・・・・・・・・・・・・・・・・・・・・ 3
静的負荷変動
4. Ripple Voltage (by Load Current) ・・・・・・・・・・・・ 4
リップル電圧(負荷電流特性)
5. Ripple-Noise ・・・・・・・・・・・・・・・・・・・・・・・・ 5
リップルノイズ
6. Overcurrent Protection ・・・・・・・・・・・・・・・・・・ 6
過電流保護
7. Dynamic Load Responce ・・・・・・・・・・・・・・・・・・ 7
動的負荷変動
8. Rise and Fall Time ・・・・・・・・・・・・・・・・・・・・ 8
立上り、立下がり時間
9. Ambient Temperature Drift ・・・・・・・・・・・・・・・・ 9
周囲温度変動
10. Minimum Input Voltage for Regulated Output Voltage ・・・ 10
最低レギュレーション電圧
11. Ripple Voltage (by Ambient Temperature) ・・・・・・・・・ 11
リップル電圧 (周囲温度特性)
12. Time Lapse Drift ・・・・・・・・・・・・・・・・・・・・・ 12
経時ドリフト
13. Output Voltage Accuracy ・・・・・・・・・・・・・・・・・ 13
定電圧精度
14. Condensation ・・・・・・・・・・・・・・・・・・・・・・・ 14
結露特性
15. Figure of Testing Circuitry ・・・・・・・・・・・・・・・ 15
測定回路図

(Final Page 15)

COSEL

Model	ZTS32405
Item	Line Regulation 静的入力変動
Object	+5V0.6A

Temperature 25℃
Testing Circuitry Figure A

1. Graph

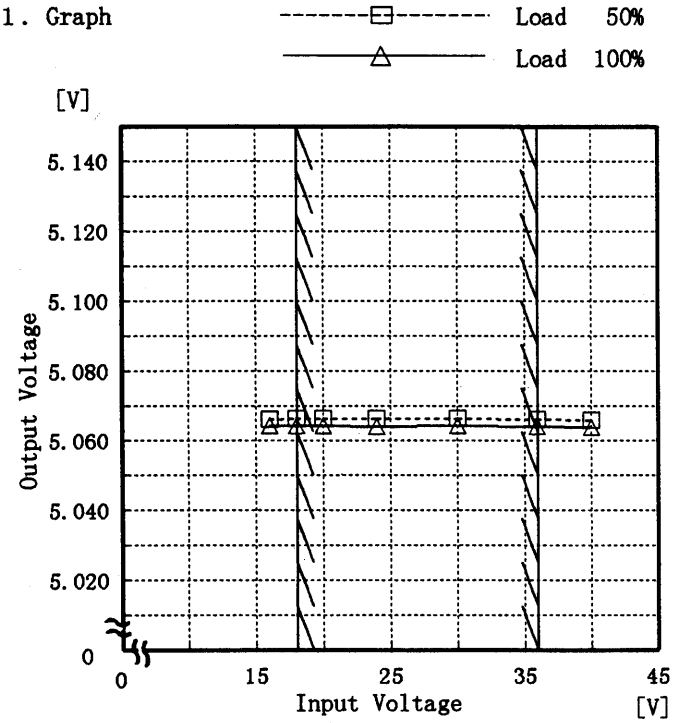

Note: Slanted line shows the range of the rated input voltage.

(注)斜線は定格入力電圧範囲を示す。

2. Values

Input Voltage [V]	Load 50% Output Volt. [V]	Load 100% Output Volt. [V]
16.0	5.066	5.064
18.0	5.066	5.064
20.0	5.066	5.064
24.0	5.066	5.064
30.0	5.066	5.064
36.0	5.066	5.064
40.0	5.066	5.064
—	—	—
—	—	—
—	—	—
—	—	—
—	—	—

COSEL

Model	ZTS32405
Item	Efficiency 効率
Object	――――――――――――

Temperature 25℃
Testing Circuitry Figure A

1. Graph

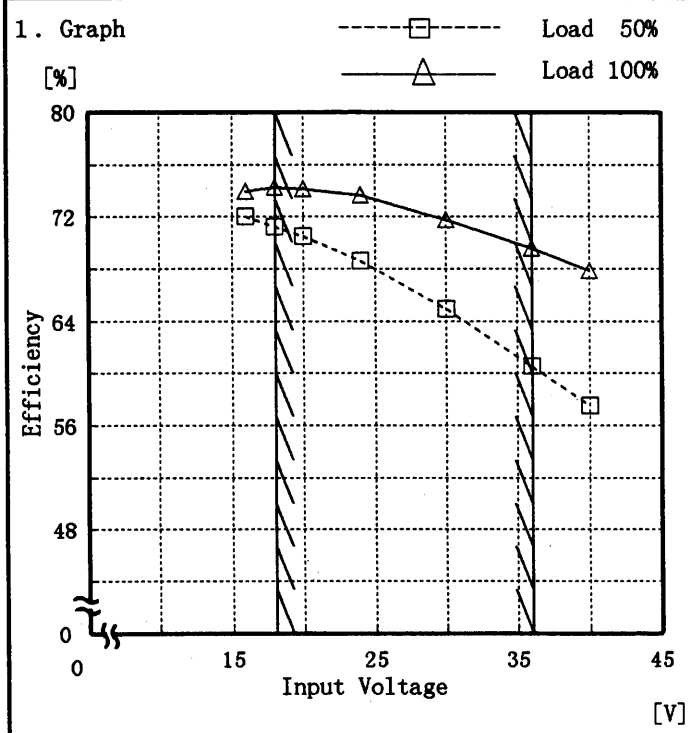

Note: Slanted line shows the range of the rated input voltage.

(注)斜線は定格入力電圧範囲を示す。

2. Values

Input Voltage [V]	Load 50% Efficiency [%]	Load 100% Efficiency [%]
16.0	72.0	73.9
18.0	71.2	74.3
20.0	70.5	74.2
24.0	68.6	73.7
30.0	64.9	71.8
36.0	60.6	69.6
40.0	57.5	67.9
—	—	—
—	—	—
—	—	—
—	—	—
—	—	—

COSEL

Model	ZTS32405
Item	Load Regulation 静的負荷変動
Object	+5V0.6A

Temperature 25℃
Testing Circuitry Figure A

1. Graph

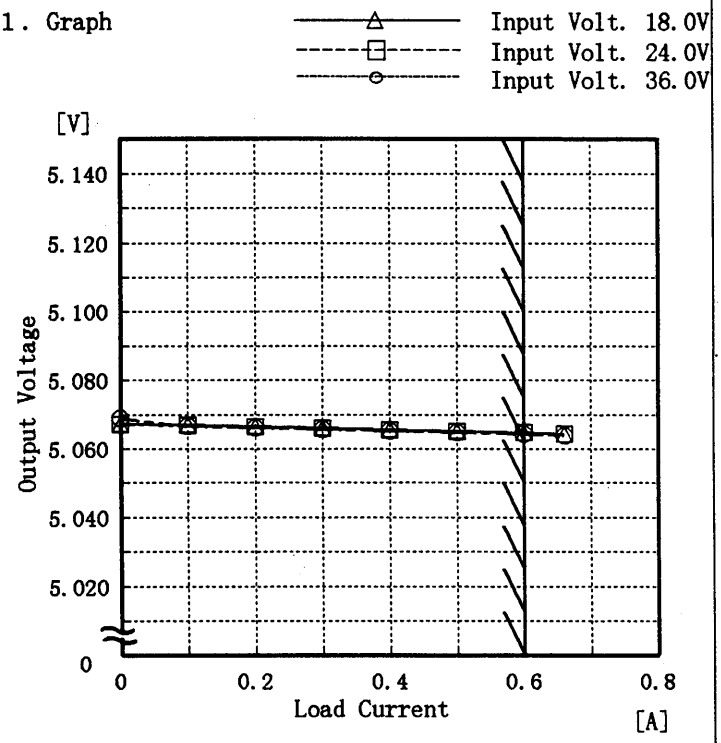

Note: Slanted line shows the range of the rated load current.

(注)斜線は定格負荷電流範囲を示す。

2. Values

Load Current [A]	Input Volt. 18.0[V] Output Volt. [V]	Input Volt. 24.0[V] Output Volt. [V]	Input Volt. 36.0[V] Output Volt. [V]
0.00	5.067	5.067	5.069
0.10	5.067	5.067	5.067
0.20	5.067	5.066	5.066
0.30	5.066	5.066	5.066
0.40	5.066	5.066	5.065
0.50	5.065	5.065	5.065
0.60	5.065	5.065	5.064
0.66	5.064	5.064	5.064
—	—	—	—
—	—	—	—

COSEL

Model	ZTS32405
Item	Ripple Voltage(by Load Current) リップル電圧(負荷電流特性)
Object	+5V0.6A

Temperature 25℃
Testing Circuitry Figure A

1. Graph

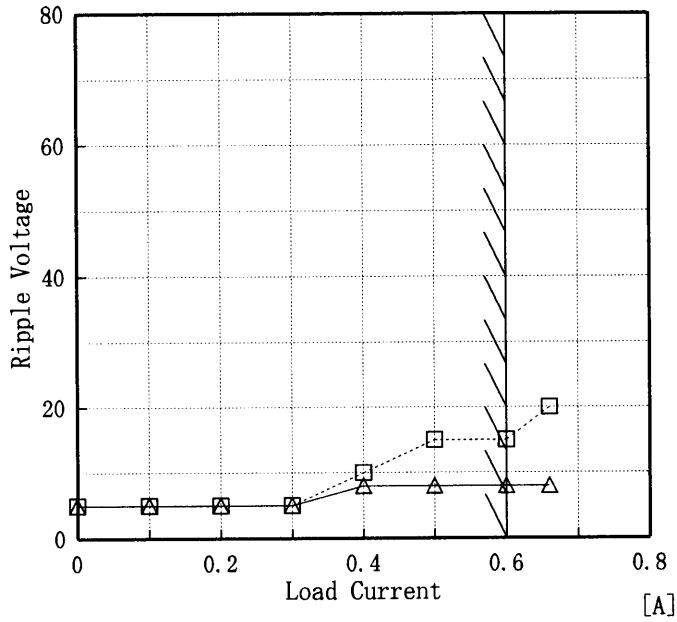

Ripple Voltage is shown as p-p in the figure below.

Note: Slanted line shows the range of the rated load current.

リップル電圧は、下図ｐ－ｐ値で示される。

(注)斜線は定格負荷電流範囲を示す。

T1: Due to AC Input Line
入力商用周期
T2: Due to Switching
ｽｲｯﾁﾝｸﾞ周期

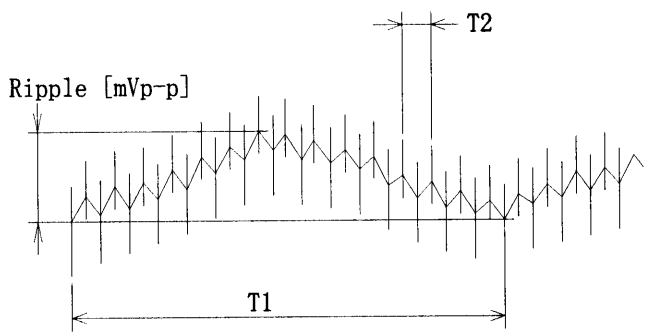

Fig. Complex Ripple Wave Form
図 リップル波形詳細図

2. Values

Load Current [A]	Input Volt. 18.0 [V] Ripple Output Volt. [mV]	Input Volt. 36.0 [V] Ripple Output Volt. [mV]
0.00	5	5
0.10	5	5
0.20	5	5
0.30	5	5
0.40	10	8
0.50	15	8
0.60	15	8
0.66	20	8
—	—	—
—	—	—
—	—	—

COSEL

Model	ZTS32405
Item	Ripple-Noise リップルノイズ
Object	+5V0.6A

Temperature 25℃
Testing Circuitry Figure A

1. Graph

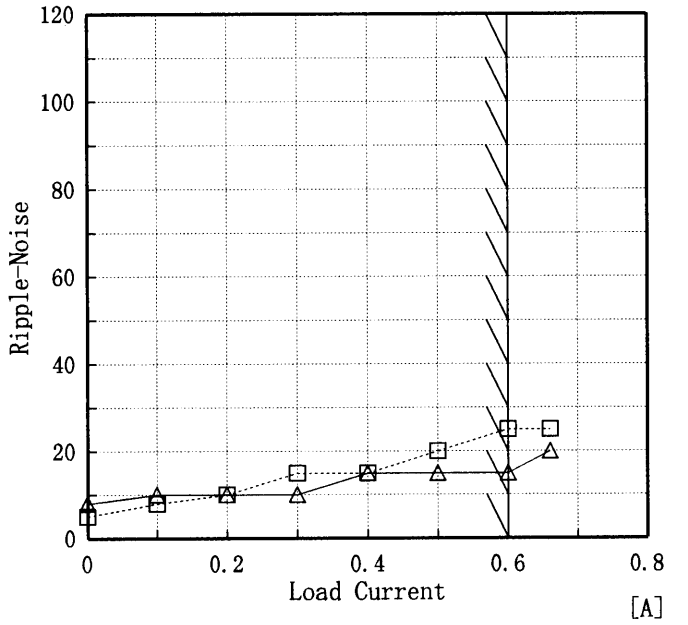

Ripple-Noise is shown as p-p in the figure below.
Note: Slanted line shows the range of the rated load current.

リップルノイズは、下図ｐ－ｐ値で示される。
(注)斜線は定格負荷電流範囲を示す。

T1: Due to AC Input Line
入力商用周期
T2: Due to Switching
ｽｲｯﾁﾝｸﾞ周期

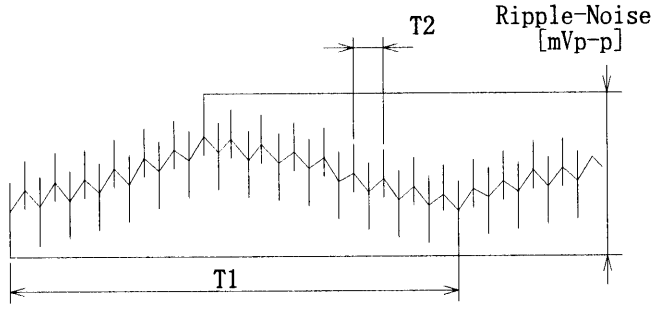

Fig. Complex Ripple Wave Form
図 リップル波形詳細図

2. Values

Load current [A]	Input Volt. 18.0 [V] Ripple-Noise [mV]	Input Volt. 36.0 [V] Ripple-Noise [mV]
0.00	5	8
0.10	8	10
0.20	10	10
0.30	15	10
0.40	15	15
0.50	20	15
0.60	25	15
0.66	25	20
—	—	—
—	—	—
—	—	—

COSEL

Model	ZTS32405
Item	Overcurrent Protection 過電流保護
Object	+5V0.6A

Temperature 25℃
Testing Circuitry Figure A

1. Graph

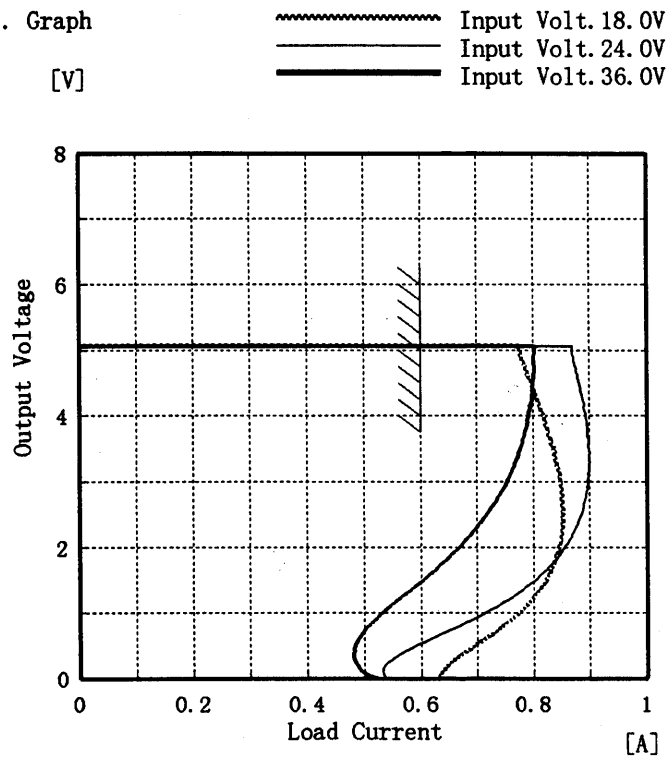

Note: Slanted line shows the range of the rated load current.

(注)斜線は定格負荷電流範囲を示す。

2. Values

Output Voltage [V]	Input Volt. 18.0[V] Load Current [A]	Input Volt. 24.0[V] Load Current [A]	Input Volt. 36.0[V] Load Current [A]
5.00	0.77	0.87	0.80
4.75	0.78	0.87	0.80
4.50	0.79	0.88	0.80
4.00	0.82	0.89	0.79
3.50	0.83	0.90	0.77
3.00	0.85	0.90	0.75
2.50	0.85	0.88	0.72
2.00	0.85	0.86	0.67
1.50	0.82	0.80	0.60
1.00	0.78	0.72	0.53
0.50	0.70	0.60	0.48
0.00	0.63	0.56	0.56

COSEL

Model	ZTS32405		
Item	Dynamic Load Responce 動的負荷変動	Temperature Testing Circuitry	25℃ Figure A
Object	+5V0.6A		

Input Volt. 24.0 V

Cycle 100 mS

Load Current

Min. Load ⟷
Load 100 %

200 mV/div

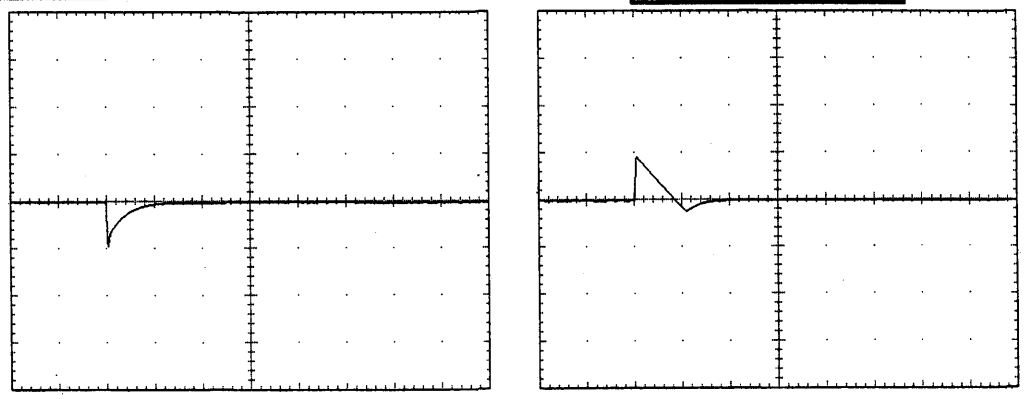

Min. Load ⟷
Load 50 %

200 mV/div

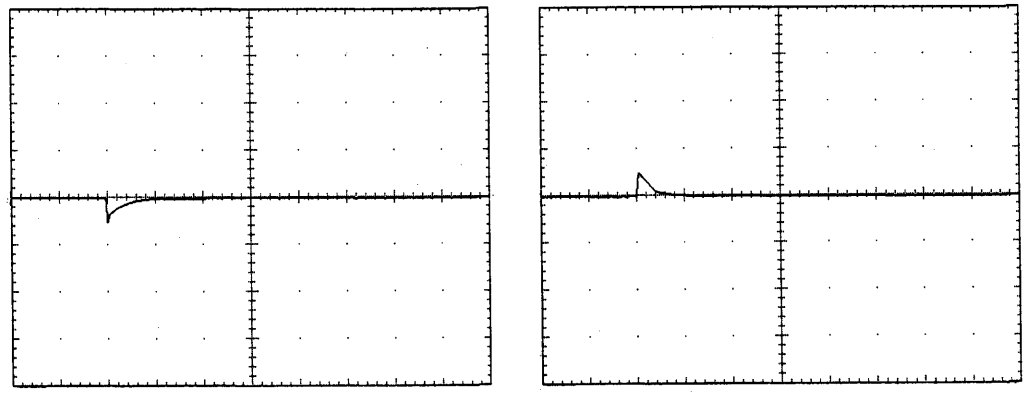

Load 50%⟷
Load 100 %

200 mV/div

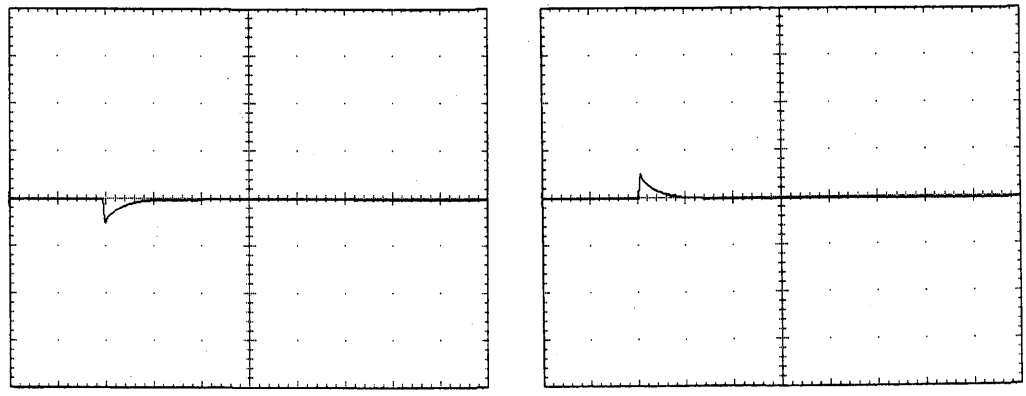

1 mS/div

BC−3132

COSEL

Model	ZTS32405	Temperature	25℃
Item	Rise and Fall Time 立上り、立下り時間	Testing Circuitry	Figure A
Object	+5V0.6A		

1. Graph

Input Volt. 18.0 V

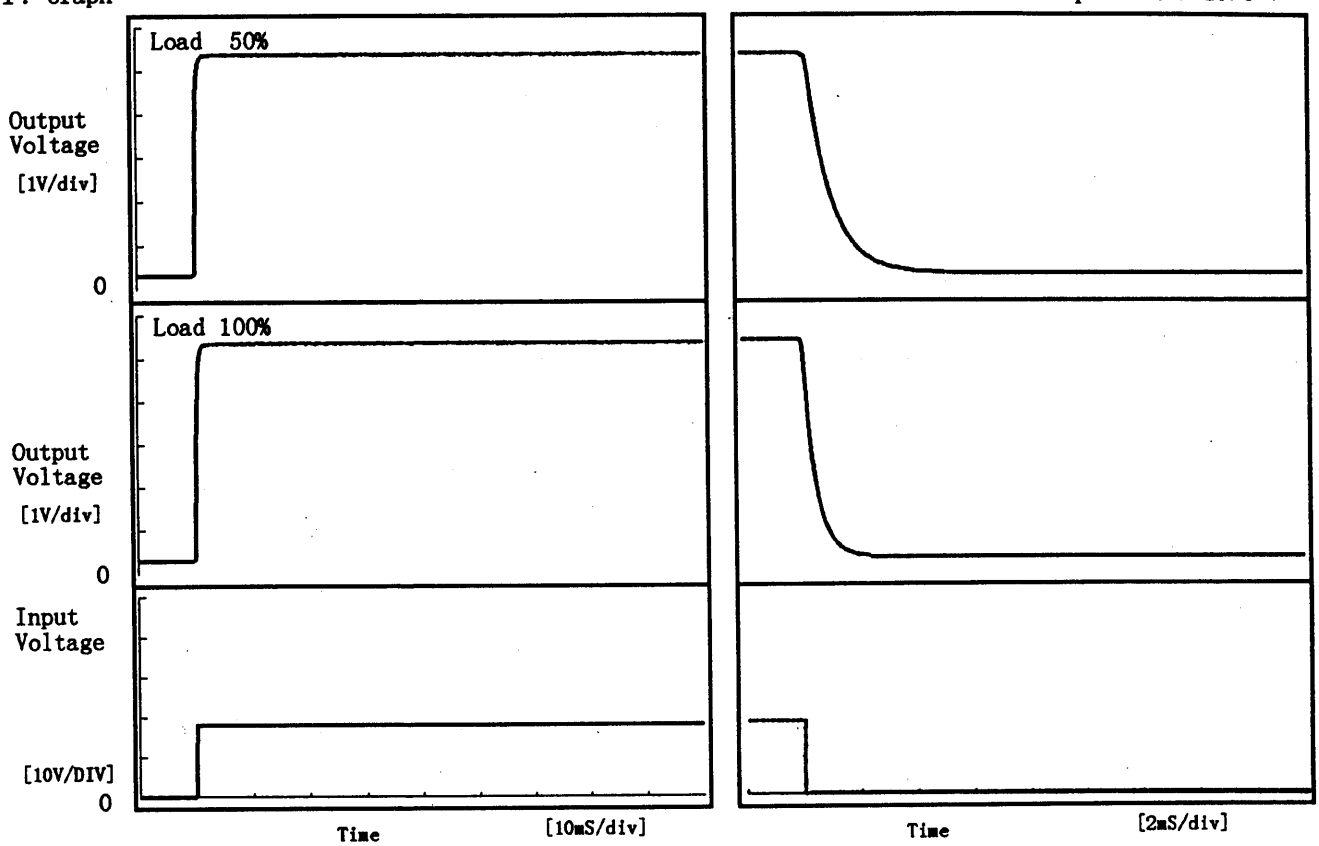

2. Values

[mS]

Load \ Time	Td	Tr	Ts	Th	Tf
50 %	0.10	0.50	0.60	0.37	1.94
100 %	0.05	0.60	0.65	0.17	1.01

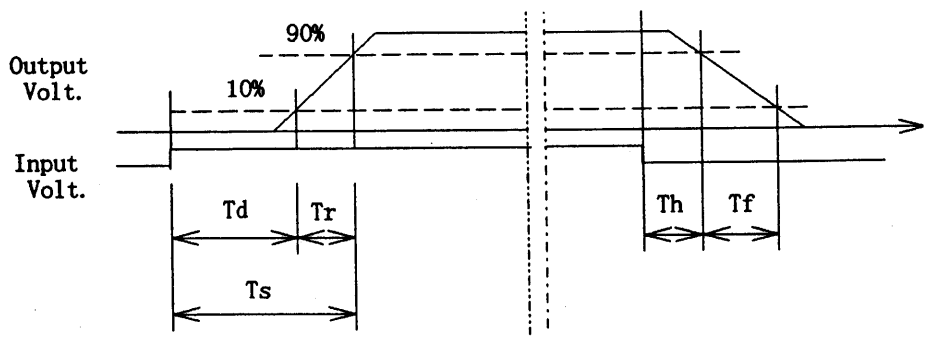

COSEL

Model	ZTS32405
Item	Ambient Temperature Drift 周囲温度変動
Object	+5V0.6A

Testing Circuitry Figure A

1. Graph

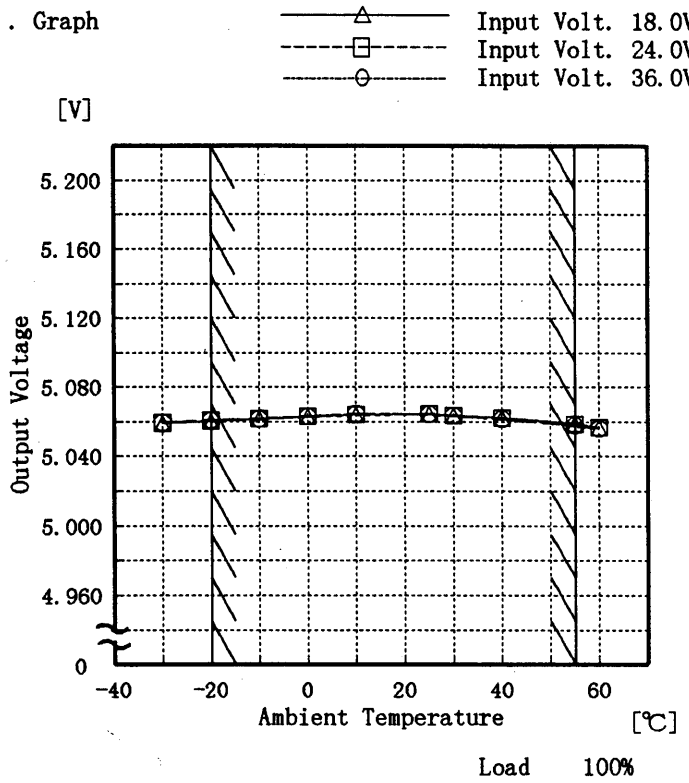

Note: Slanted line shows the range of the rated ambient temperature.

(注)斜線は定格周囲温度範囲を示す。

2. Values

Temperature [℃]	Input Volt. 18.0[V] Output Volt. [V]	Input Volt. 24.0[V] Output Volt. [V]	Input Volt. 36.0[V] Output Volt. [V]
-30	5.059	5.059	5.060
-20	5.061	5.061	5.061
-10	5.062	5.062	5.062
0	5.063	5.063	5.063
10	5.064	5.064	5.064
25	5.064	5.064	5.064
30	5.064	5.064	5.063
40	5.062	5.062	5.062
55	5.059	5.059	5.058
60	5.057	5.057	5.056
—	—	—	—

COSEL

Model	ZTS32405
Item	Minimum Input Voltage for Regulated Output Voltage 最低レギュレーション電圧
Object	+5V0.6A

Testing Circuitry Figure A

1. Graph

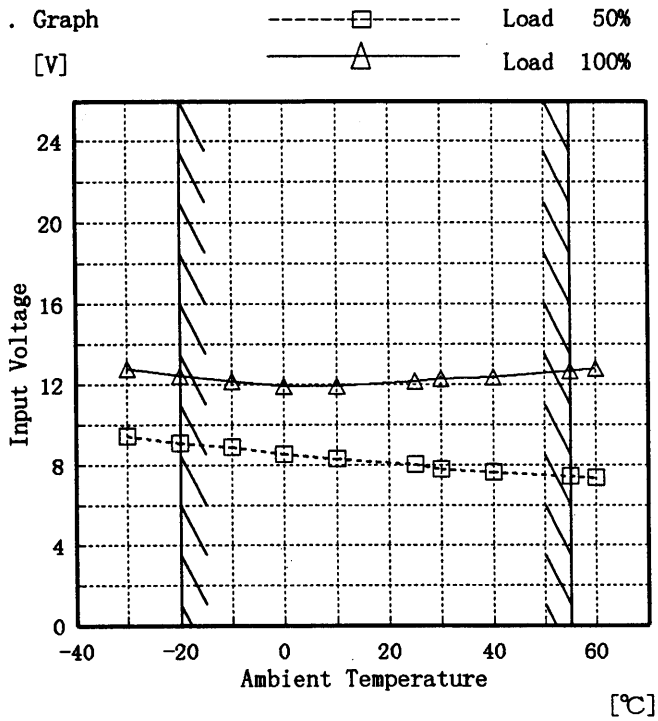

Note: Slanted line shows the range of the rated ambient temperature.

(注)斜線は定格周囲温度範囲を示す。

2. Values

Ambient Temp. [℃]	Load 50% Input Volt. [V]	Load 100% Input Volt. [V]
-30	9.5	12.8
-20	9.1	12.4
-10	8.9	12.2
0	8.5	11.9
10	8.3	11.9
25	8.0	12.2
30	7.8	12.3
40	7.7	12.4
55	7.4	12.7
60	7.4	12.8
—	—	—

COSEL

Model	ZTS32405
Item	Ripple Voltage (by Ambient Temp.) リップル電圧（周囲温度特性）
Object	+5V0.6A

Testing Circuitry　Figure A

1. Graph

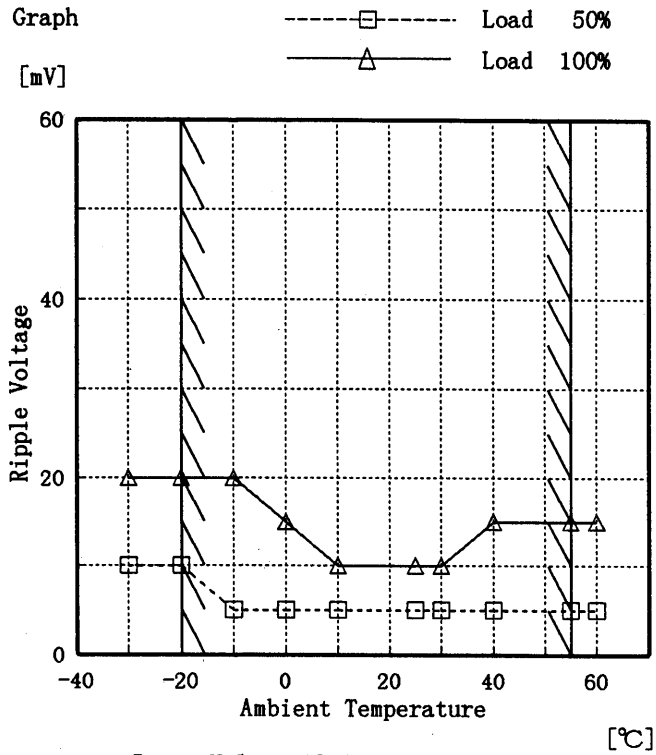

Input Volt.　18.0 V

Note: Slanted line shows the range of the rated ambient temperature.

(注)斜線は定格周囲温度範囲を示す。

2. Values

Ambient Temp. [℃]	Load 50% Ripple Output Volt. [mV]	Load 100% Ripple Output Volt. [mV]
-30	10	20
-20	10	20
-10	5	20
0	5	15
10	5	10
25	5	10
30	5	10
40	5	15
55	5	15
60	5	15
—	—	—

COSEL

Model	ZTS32405
Item	Time Lapse Drift 経時ドリフト
Object	+5V0.6A

Temperature 25 ℃
Testing Circuitry Figure A

1. Graph

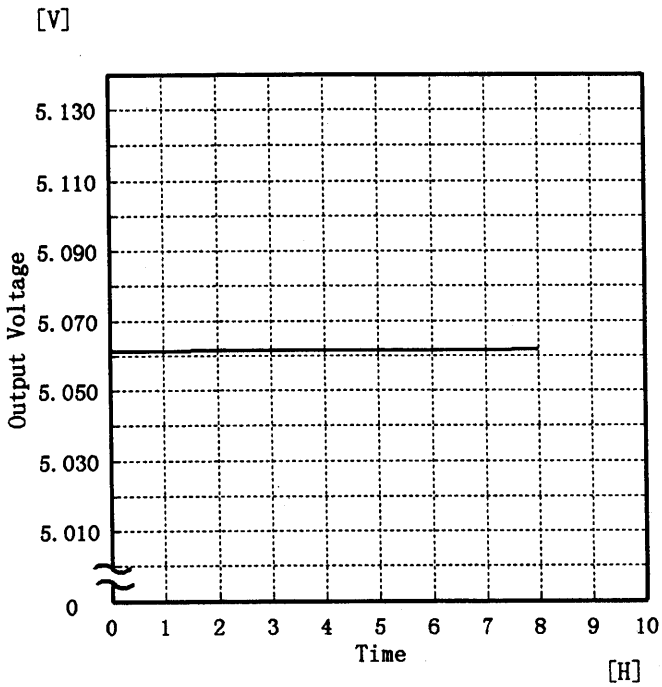

Input Volt. 24V
Load 100%

2. Values

Time since start [H]	Output Voltage [V]
0.0	5.063
0.5	5.061
1.0	5.061
2.0	5.061
3.0	5.061
4.0	5.062
5.0	5.062
6.0	5.062
7.0	5.062
8.0	5.062

COSEL

Model	ZTS32405	
Item	Output Voltage Accuracy 定電圧精度	Testing Circuitry Figure A
Object	+5V0.6A	

Output Voltage Accuracy

This is defined as the value of the output voltage, regulation load, ambient temperature and input voltage varied at random in the range as specified below.

Temperature : -20～55 ℃

Input Voltage : 18.0～36.0 V

Load Current : 0.0～0.6 A

* Output Voltage Accuracy = ±(Maximum of Output Voltage − Minimum of Output Voltage)／2

$$* \text{ Output Voltage Accuracy (Ration)} = \frac{\text{Voltage Accuracy}}{\text{Rated Output Voltage}} \times 100$$

定電圧精度

周囲温度、入力電圧、負荷を下記仕様内で、任意に変動させたときの出力電圧の変動をいう。

周囲温度 -20～55 ℃

入力電圧 18.0～36.0 V

負荷電流 0.0～0.6 A

* 定電圧精度(変動値) ＝ ±(出力電圧の最高値－出力電圧の最低値)／2

$$* \text{ 定電圧精度(変動率)} = \frac{\text{変動値}}{\text{定格出力電圧}} \times 100$$

Item	Temperature [℃]	Input Voltage [V]	Output Current [A]	Output Voltage [V]	Output Voltage Accuracy [mV]	Output Voltage Accuracy (Ration) [%]
Maximum Voltage	25	36.0	0.0	5.070	±6	±0.2
Minimum Voltage	55	36.0	0.6	5.058		

COSEL

Model	ZTS32405
Item	Condensation 結露特性
Object	+5V0.6A

Testing Circuitry Figure A

1. Condensation test

Testing procedure is as follows.

① Keeping and cooling the unit in a tank at -10℃ for an hour with the input off.

② Taking it out of the tank and dewing itself in a room where the temperature is 25℃ and the humidity is 40%RH.

③ Testing electrical characteristics of the unit to confirm there be no fault.

1．結露特性試験

入力を切った状態で、恒温槽で－１０℃に冷却しておき、約１時間後に恒温槽から取り出し、室温２５℃、湿度４０％RHの状態におき結露させ、その電気的特性の測定を行い、異常のないことを確認する。

2. Values

Item	Data	Testing Conditions
Output Voltage [V]	5.046	Input Volt.: 24V, Load Current:0.6A
Line Regulation [mV]	1	Input Volt.: 18～36V, Load Current:0.6A
Load Regulation [mV]	9	Input Volt.: 24V, Load Current:0～0.6A

COSEL

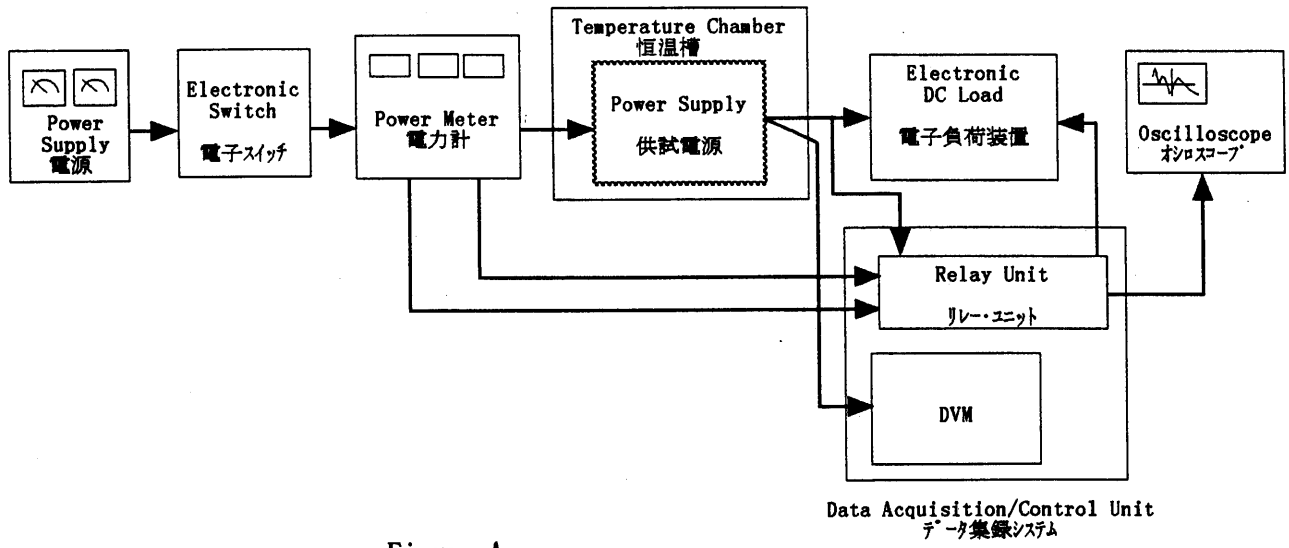

Figure A